PERI UP Flex
Trench Bridge

Instructions for Assembly and Use – Standard Configuration – Version 2.1

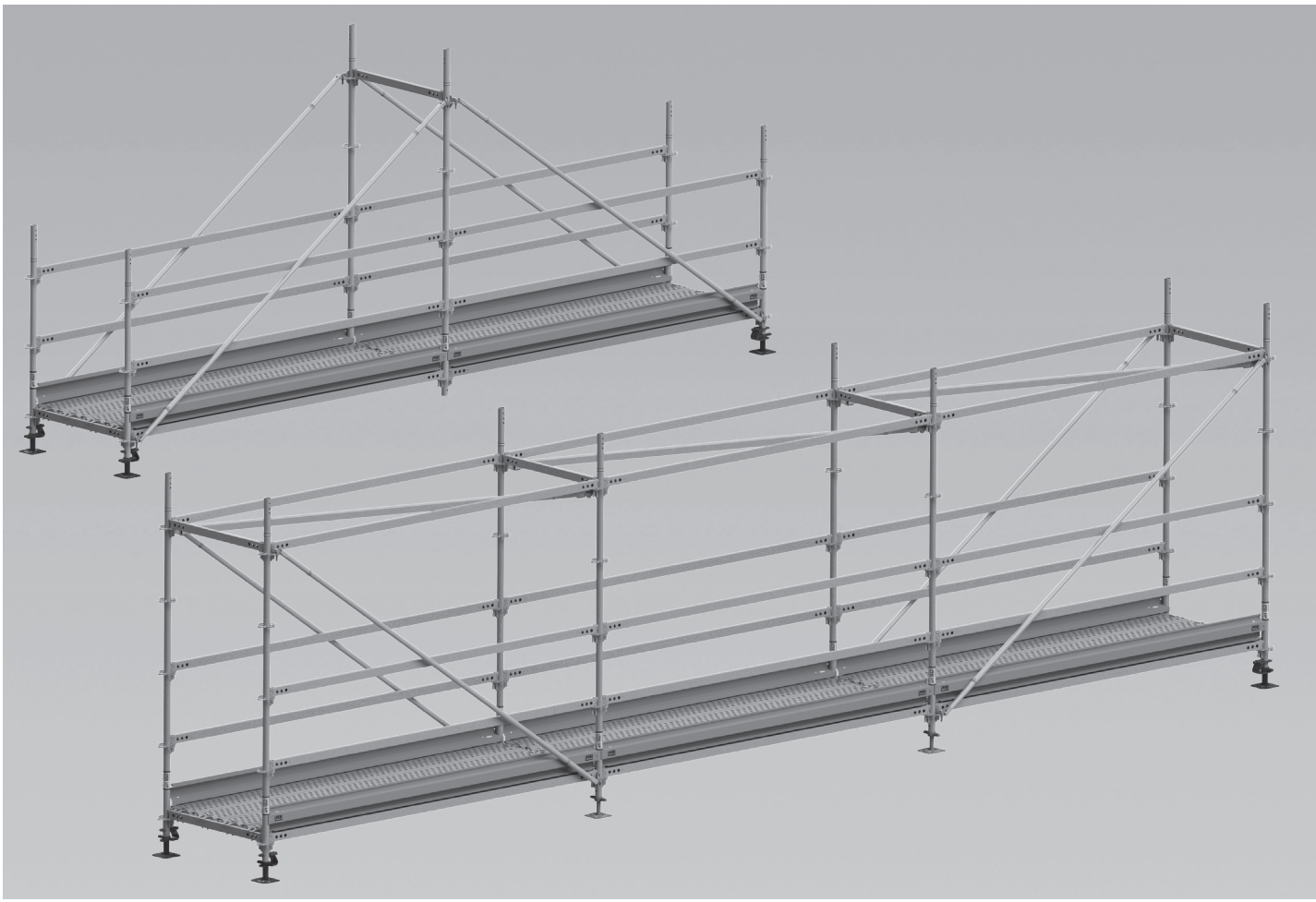

Content

Overview
Components 3
Key 4

Introduction
Target groups 5
Product description 6
Intended use 6
Cleaning and maintenance instructions 7
Disposal 7
Information regarding relocation by crane 7
Additional technical documentation 8
Instructions for Use 8

Safety instructions
Cross-system 9
System-specific 11
Anchoring 11
Storage and transportation 11
Identification marking 12
Laws and regulations 12
Inspection, handover and use 13

Assembly
A1 Assembly 14
General 14
Base level 14
Installing steel decks 16
Installing the braces 17
Fitting the horizontal ledgers 17
Lateral protection 18
A2 Relocation by crane 20
Attaching to the crane 20
Moving by crane 21
A3 Support forces 22
Trench Bridge 22

Program overview
PERI UP Flex Trench Bridge 24

Overview

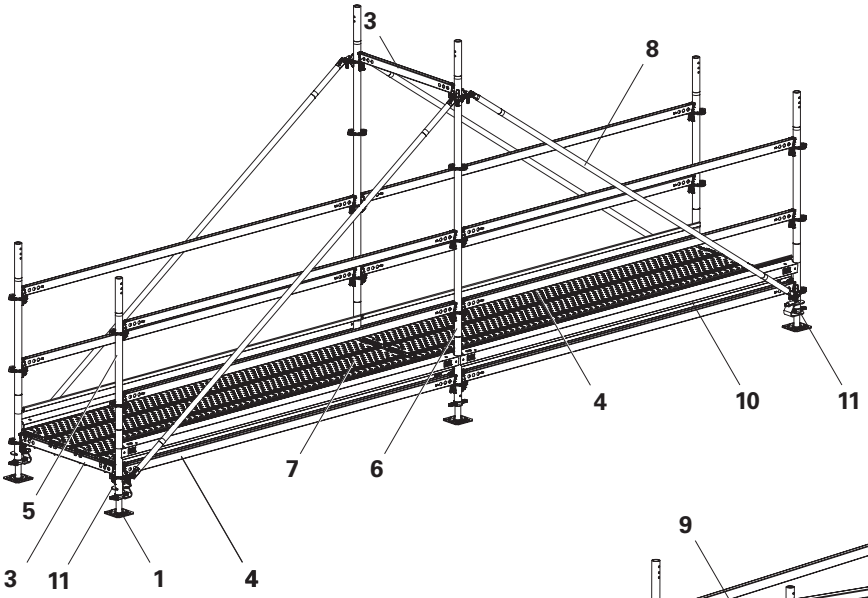

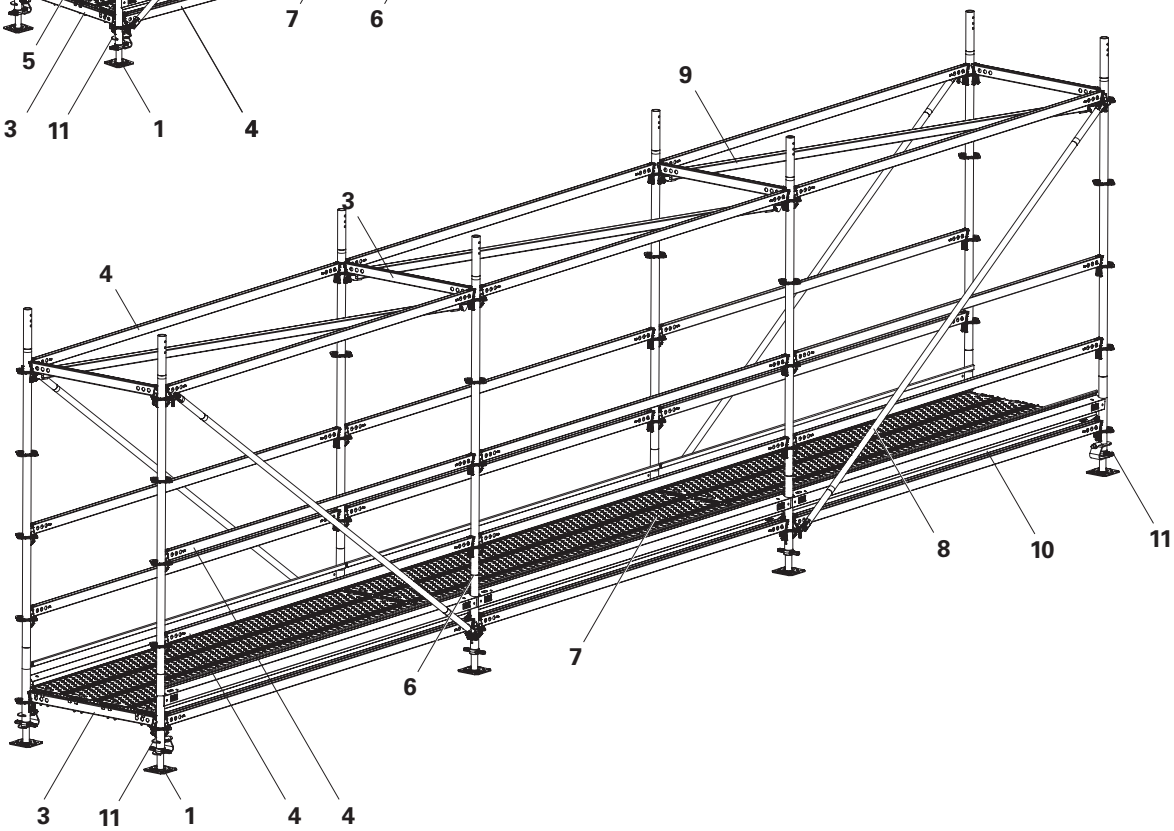

Components

Pos. no.	Designation	Article no.
1	Base Spindle UJB 38-50/30	100411
3	Horizontal Ledger UH-2 100	132004
4	Horizontal Ledger UH-2 300	132022
5	Top Standard UVH-2 150	132198
6	Top Standard UVH-2 250	132208
7	Steel Deck UDG-2 25 x 300	132515
8	Node Brace UBK-2 300/200	133463
9	Horizontal Brace UBH Flex 300/100	114892
10	Steel Toe Board UPY 300	110211
11	Spindle Locking UJS	100863

Terminology

Components are not always named in full so that they are easier to read. All components deemed valid according to the program overview may be used. Exceptions are specified.

Example:
– Horizontal ledger
equally valid:
– Horizontal Ledger UH Plus
– Horizontal Ledger UH-2

Key

Pictogram | Definition

- Danger/Warning/Caution
- Note
- To be complied with
- Load-bearing point
- Visual inspection
- Tip
- Incorrect use
- Safety helmet
- Safety shoes
- Safety gloves
- Safety goggles
- Personal protective equipment to prevent falling from a height (PPE)

Arrows

- Arrow representing an action
- Arrow representing a reaction of an action*
- Arrow representing forces

* If not identical to the action arrow.

Safety instruction categories
The safety instructions alert site personnel to the risks involved and provide information on how to avoid these risks. Safety instructions can be found at the beginning of the section or before instructions for action and are highlighted as follows:

Danger
This sign indicates an extremely hazardous situation which could result in death or serious, irreversible injury if the safety instructions are not followed.

Warning
This sign indicates a hazardous situation which could result in death or serious, irreversible injury if the safety instructions are not followed.

Caution
This sign indicates a hazardous situation which could result in minor or moderate injury if the safety instructions are not followed.

Note
This sign indicates situations in which failure to observe the information can result in material damage.

Format of the safety instructions

Signal word
Type and source of hazard!
Consequences of non-compliance.
⇒ Preventative measures.

Conventions
- Instructions are numbered with: 1. ....., 2. ....., 3. .....
- The result of an instruction is shown by: →
- Position numbers are clearly provided for the individual components and are given in the drawing, e.g. **1**, in the text in brackets, for example (**1**).

Multiple position numbers, i.e. alternative components, are represented with a slash: e.g. **1/2**.

Units shown in the illustrations
Dimensions featured in the illustrations are in cm, but without units.
Deviating units specified in addition, e.g. in m.
Exception:
In the Program overview section, measurements are always given in mm.

Load details featured in the illustrations are in kg, but without units.
Deviating units specified in addition, e.g. in t.

Notes on illustrations
The illustration on the front cover of these instructions is understood to be a system representation only. The assembly steps presented in these Instructions for Assembly and Use are shown in the form of examples with only one component size.
They are valid for all component sizes contained in the standard configuration.

To facilitate understanding, detailed illustrations are sometimes incomplete. The safety installations that may be missing from these detailed illustrations must nevertheless be available.

Program overview
Article numbers beginning with the numbers 3 and 4 are only available as rental or used items.

Target groups

Scaffolding contractors/contractors
These assembly instructions are intended for contractors who either
- assemble, modify and dismantle the scaffolds, or
- use them, e.g. for pouring concrete, or
- allow them to be used for other operations, e.g. carpentry or electrical work.

Safety and Health Protection Coordinator*
- is appointed by the client,
- must identify potential hazards during the planning phase,
- determines measures that provide protection against risks,
- creates a safety and health protection plan,
- coordinates the protective measures for the contractor and site personnel so that they do not endanger each other,
- monitors compliance with the protective measures.

Competent person
- is appointed by the scaffolding contractor,
- must be on site for all scaffolding work,
- prepares and updates the plan for assembly, modification and dismantling,
- prepares and updates the plan for use of the scaffold by the scaffold user,
- supervises the assembly, modification and dismantling work (supervisor).

Competent persons qualified to carry out inspections
Due to the specialist knowledge gained from professional training, work experience and recent professional activity, the competent person qualified to carry out inspections has a reliable understanding of safety-related issues and can carry out inspections correctly. Depending on the complexity of the inspection to be undertaken, e.g. scope of testing, type of testing or the use of certain measuring devices, a range of specialist knowledge is necessary.

Qualified personnel
Scaffolds may only be assembled, modified or dismantled by personnel who are suitably qualified to do so. Qualified personnel must have completed a course of training** in the work to be performed, covering the following points at least:
- Explanation of the plan for the assembly, modification or dismantling of the scaffold in an understandable form and language.
- Description of the measures for safely assembling, modifying or dismantling the scaffold.
- Naming of the preventive measures to be taken to avoid the risk of persons and objects falling.
- Designation of the safety precautions in the event of changing weather conditions that could adversely affect the safety of the scaffold, as well as the personnel concerned.
- Details regarding permissible loads.
- Description of all other risks and dangers associated with assembly, modification or dismantling operations.

- **In other countries, ensure that the relevant national guidelines and regulations in the respective current version are complied with!**
- **If no country-specific regulations are available, it is recommended to proceed according to German guidelines and regulations.**
- **A competent person must be present on site during scaffolding operations.**

Product description

Features
The trench bridge is an application based on the PERI UP Flex module system. It serves as a temporary bridge on construction sites to ensure safe access to workplaces over obstacles (e.g. bridging the distance between the building and the outer edge of the excavation pit)

The temporary bridges are typified and the technical data for these types are determined and provided. The transfer of the resulting loads to the contact areas of the bridge must be verified separately in each individual case.

For the basic assembly of the components used, refer to the assembly instructions "PERI UP scaffolding kit core components".

Intended use
PERI products have been designed for exclusive use in the industrial and commercial sectors only by suitably trained personnel.

Technical data
Scaffolding bay lengths ≤ 300 cm
Scaffold width: 100 cm
Clear passage width: 84 cm
System length:
- 2-bay structure ≤ 600 cm
- 3-bay structure ≤ 900 cm

Load assumptions according to EN 12810/12811:
LC3 (2.0 kN/m² as uniformly distributed surface load)
Wind load q = 0.2 kN/m²

Cleaning and maintenance instructions

Clean the scaffolding components after each use to maintain the value and operational readiness of the PERI products over the long term.

Some repair work may also be inevitable due to the tough working conditions.

The contractor must ensure that the personal protective equipment required for cleaning, maintenance and repair work, e.g.
- safety helmet,
- safety shoes,
- safety gloves,
- safety goggles,

is available and used as intended.

The following instructions should help to keep cleaning and maintenance costs as low as possible.

Cleaning tools must be adapted to the respective surfaces of the components so that they are not damaged.

Clean mechanical components to remove dirt or concrete residues before and after use and grease them with suitable lubricants.

Provide suitable support for the components during cleaning so that no unintentional change in their position is possible.

Do not clean components suspended on crane lifting gear.

Any repairs to PERI products are to be carried out by PERI qualified personnel only.

Disposal

Dispose of in accordance with the relevant national regulations.

Information regarding relocation by crane

Only vertical crane transportation is permitted. Do not assemble scaffolds horizontally and then erect them.

Before moving the crane, it must always be ensured that:
- all base spindle locks have been fitted,
- all vertical joints are securely connected to one another,
- all deck levels have additional bracing using horizontal ledgers,
- all wedges have been securely fixed in place using a hammer,
- all locks against lifting are engaged,
- all guardrails are at their end position,
- In strong winds, the Toe Boards UPY and the Toe Boards UPF must be additionally secured.
- Do not stand under suspended loads, guide the scaffold with ropes.

Additional technical documentation

- Approval:
  – Z-8.22-863 PERI UP Flex Module System
- Assembly Instructions:
  – PERI UP Scaffolding Kit core components
- User information:
  – User information for pallets and stacking devices
- Brochure:
  – PERI UP Access Technology

Instructions for Use

Use in a way not intended, deviating from the standard configuration or the intended use according to the Instructions for Assembly and Use, represents an application with a potential safety risk, e.g. risk of falling.

Deviations from the standard configuration must be verified for the application by means of separate strength and stability calculations (Industrial Safety Regulation Appendix 1, No. 3.2.1) and explicitly reflected in the assembly instructions.

All components listed in the program overview may be used for assembly. Other components are not permitted. Exceptions are named, or must be planned and verified on a project-specific basis.

Only PERI original components may be used. The use of other products and spare parts is not allowed.
Changes to PERI components are not permitted.

The system described in these Instructions for Assembly and Use may contain patent-protected components.

Cross-system

Safety instructions apply to all service life phases of the system.

General
The contractor must guarantee that the Instructions for Assembly and Use supplied by PERI are available at all times and understood by the site personnel.

These Instructions for Assembly and Use can be used as the basis for creating a risk assessment. The risk assessment is compiled by the contractor. However, the Instructions for Assembly and Use are not a substitute for a risk assessment!

Observe and comply with the safety instructions and permissible loads.

For the application and inspection of PERI products, the current safety regulations and guidelines valid in the respective countries must be observed.

Materials and working areas are to be inspected before each use and assembly, for:
- Damage,
- stability and
- function.

Damaged components must be exchanged immediately on site and may no longer be used.

Safety components are to be removed only when they are no longer required.

When on slab formwork, scaffolds and working platforms:
- Do not jump,
- do not run,
- do not drop anything from or onto it.
  Components provided by the contractor must comply with the characteristics stipulated in these Instructions for Assembly and Use and all applicable laws and standards. Unless otherwise indicated, the following applies in particular:
- Timber components:
  Strength class C24 for solid wood according to DIN EN 338:2016-07.
- Scaffolding tubes:
  Galvanised steel tubes with minimum dimension Ø 48.3 x 3.2 mm according to DIN EN 12811-1:2004-03 4.2.1.2.
- Scaffolding tube couplings:
  according to DIN EN 74-1:2005-12.

Deviations from the standard configuration are only permitted after a further risk assessment has been carried out by the contractor.

Appropriate measures for working and operational safety, as well as stability, are defined on the basis of this risk assessment.

Corresponding proof of stability can be provided by PERI on request, if the risk assessment and resulting measures to be implemented are made available. Before and after exceptional occurrences that may have an adverse effect on the safety of the scaffolding system, the contractor must immediately
- Produce another risk assessment and make use of its results to take suitable steps to guarantee the stability of the scaffolding system,
- arrange for an extraordinary inspection to be carried out by a competent person qualified to do so. The aim of this inspection is to identify and rectify any damage in good time in order to guarantee safe use of the scaffolding system.

Exceptional events could be:
- Accidents,
- long periods of non-use,
- natural events, e.g. heavy rainfall, icing, heavy snowfall, storms or earthquakes.

Assembly, modification and dismantling work
Assembly, modification or dismantling of scaffolding systems may only be carried out by qualified persons under the supervision of a competent person. The qualified personnel must have received appropriate training for the work to be carried out with regard to specific risks and dangers.

On the basis of the risk assessment and the Instructions for Assembly and Use, the contractor must create installation instructions to guarantee safe assembly, modification and dismantling of the scaffolding system.

The contractor must ensure that the personal protective equipment required for the assembly, modification or dismantling of the scaffolding system, e.g.
- safety helmet,
- safety shoes,
- safety gloves,
- safety goggles,

is available and used as intended.

Comply with the respective assembly descriptions and safety instructions when making modifications or additions to the scaffold.

If personal protective equipment against falling from a height (PPE) is required or specified in local regulations, the contractor must determine appropriate attachment points on the basis of the risk assessment.
The PPE to be used to prevent falling is determined by the contractor.

The contractor must
- provide safe working areas for site personnel, which are to be reached through the provision of safe access ways. cordon off and clearly mark danger zones.
- guarantee stability during all stages of construction, in particular during assembly, modification and dismantling operations.
- ensure and demonstrate that all loads that occur are safely transferred.

Use
Every contractor who uses or allows the scaffolding systems to be used, is responsible for ensuring that the equipment is in good condition.

If the scaffolding system is used successively or at the same time by several contractors, the health and safety coordinator must point out any possible mutual hazards and all work must then be coordinated.

System-specific

The load-distributing support used, such as planking, must match the respective substrate. If multiple layers are required, planks are to be arranged crosswise.
It must be ensured that the scaffold cannot shift in a horizontal direction, irrespective of what substrate is being used.

Close access hatches immediately after use.

Couplings with screw closures must be tightened with 50 Nm. This corresponds to a force of 20 kg using a lever arm length of 25 cm.

Secure the wedges with a jarring blow using a 500 g hammer.

Anchoring

It must be ensured on site that the scaffolding cannot shift.

Ensure that the relevant national guidelines and regulations are complied with!

Storage and transportation

Store and transport components in such a way that no unintentional change in their position is possible. Detach lifting accessories and lifting gear from the lowered components only if they are in a stable position and no unintentional change is possible.

Do not drop the components.

Use PERI lifting accessories and lifting gear and only those load-bearing points provided on the component.

During the moving procedure:
- ensure that components are picked up and set down in such a way that unintentional falling over, falling apart, sliding, falling down or rolling is avoided.
- no one is allowed to remain under the suspended load.

Always guide pre-assembled scaffolding bays, scaffolding units or scaffolding sections with ropes when moving them by crane.

The access areas on the construction site must be free of obstacles and tripping hazards and must also be slip-resistant.

For transportation, the substrate must have sufficient load-bearing capacity.

Use original PERI storage and transport systems, e.g. crate pallets, pallets or stacking devices.

Identification marking

When carrying out the work the following signs must be observed:
If certain parts of the scaffold are not ready for use – especially during assembly, modification and dismantling – a "No Entry" warning sign restricting access must be clearly displayed (see Sign 1).
In addition, the area must be adequately closed off in order to prevent access.

After assembly has been completed, all scaffold entry points must clearly display the designated sign. (Sign 2)
The identification marking do not replace the inspection log! (Sign 2, rear side)

Sign 1

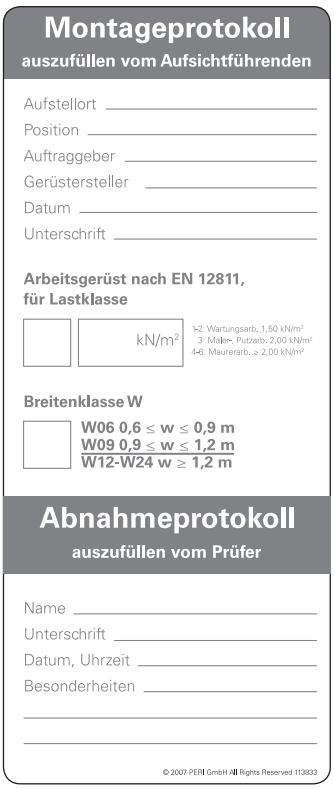

Sign 2

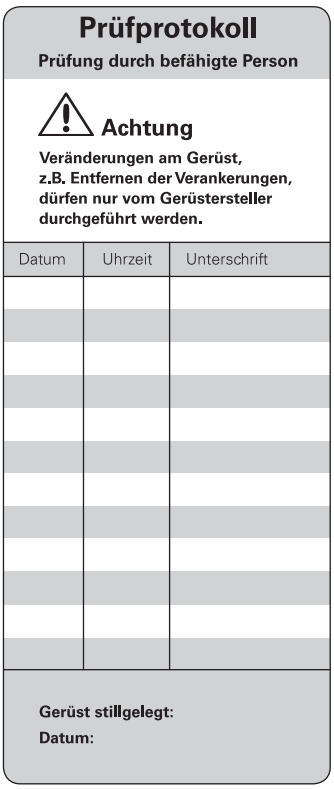

Sign 2, rear side

Laws and regulations

When assembling, modifying, dismantling and using the scaffolds in Germany, accident prevention regulations and guidelines of the employer's liability insurance associations, as well as national health and safety regulations, must be followed, especially:
- German Product Safety Act (ProdSG)
- Directive 2009/104/EC
- Operating Safety Regulation (BetrSichV)
- Statutory Accident Insurance (DGUV) Information 201-011)
- BGV A1 (Trade Association Regulations)
- TRBS 2121 (Technical Regulations for Operational Safety)
- TRBS 1203 (Technical Regulations for Operational Safety)
- Regulations for Occupational Health and Safety on Construction Sites 30 (RAB 30)

The latest version in each case is applicable.

In other countries, ensure that the relevant national guidelines and regulations in the respective current version are complied with!

Inspection, handover and use

The erected scaffold must be inspected by the scaffolding contractor in order to determine that assembly has been carried out correctly. If the contractor is convinced that the scaffold has been correctly erected, it can then be handed over to the user.
It is advisable to carry out the handover with the user and, for example, to document this in a written report.

During the handover, the scaffolding contractor must advise the user of any possible risks involved with non-intended use and his obligation to provide adequate prevention against risk and danger!
- **Put up safety and warning signs at the scaffold access point.**
- **Handover of a usage plan.**

The contractor who uses scaffolding, must ensure that the scaffolding is in good condition and not arbitrarily altered in any way. In this respect, the qualified specialists must be instructed that if changes have obviously been made during use, these must be reported to the respective qualified and competent person.

Inspection based on

Risk assessment
Instructions for Assembly and Use
Plan for assembly, modification and dismantling

Components used	Stability	Working and operational safety
Condition, e.g. obviously undamaged	Load-bearing capacity of the substrate and attachment points	Identification marking of widths and load classes
Identification markings, e.g. tubes, scaffold couplers, system components	Anchoring, inspection, dimensions	Lateral protection
Dimensions, e.g. planking, tube wall thickness	Supporting system	Stairs
	Spacing of standards, suspensions, console brackets, kicker braces	Corner execution
	Anchoring pattern, bracing and reinforcement	Completeness and support of the decking
	Eccentricities, spindle lengths, inclinations, tolerances	Spacing between the building and edge of decking
		Decking configuration depending on the fall height
		Protection panel in roof edge protection scaffold
		Distance to overhead lines/lightning protection

Source: based on TRBS 2121 Part 1

A1 Assembly

General

For a basic description of the assembly of scaffolding components in the PERI UP system, see the PERI UP assembly instructions – core components of scaffolding kit.

Comply with the prescribed assembly sequences!

Pre-assemble the trench bridge on a level and load-bearing surface.
Lift the completed trench bridge to the required place with the crane.

The trench bridge is not designed to provide an attachment point for personal protective equipment to prevent falling from a height (PPE).
PPE is not required for the standard construction of the trench bridge.

Base level

Components

1 Base Spindle UJB 38-50/30
3 Horizontal Ledger UH-2 100
4 Horizontal Ledger UH-2 300
5 Top Standard UVH-2 150
6 Top Standard UVH-2 250
7 Steel Deck UDG-2 25 x 300
11 Spindle Locking UJS

Assembly

1. Set out Horizontal Ledger UH-2 (**3 + 4**).
2. Set up Base Spindles UJB (**1**) for all standards. (Fig. A1.01)

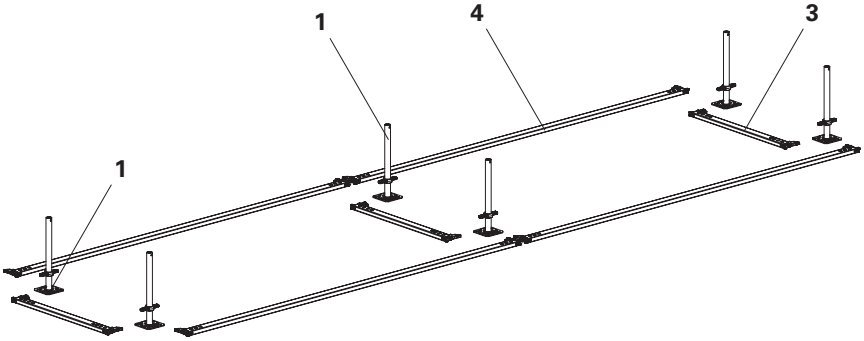

Fig. A1.01

3. Place the top standards (**5 + 6**) on the base spindles with the upper side down and connect them using horizontal ledgers (**3 + 4**). Do not hammer the wedges in yet.
   – In the case of a span of 6 m: Fit the Top Standards UVH-2 100 (**5**) onto the edge frame columns **(A + C**). (Fig. A1.02)
   Fit the Top Standards UVH-2 200 (**6**) onto the centre frame column (**B**).
   – In the case of a span of 9 m: Fit the Top Standards UVH-2 200 (**6**) onto all frame columns. (Fig. A1.03)

Longer top standards may also be installed in all positions.

4. The base level is aligned horizontally by adjusting the Base Spindles UJB (**1**).
5. Securely fix the wedges of Horizontal Ledgers UH-2 (**3+ 4**) in position with a jarring blow using a hammer. (Fig. A1.02 + Fig. A1.02a)
6. Secure the base spindles of the edge frames with Spindle Locking UJS (**11**).
   – In the case of a span of 6 m: Secure the base spindles of the edge frame columns (**A, C**). The base spindles of the centre frame column (**B**) remain unsecured.
   – In the case of a span of 9 m: Secure the base spindles of the edge frame columns (**A, D**). The base spindles of the centre frame columns (**B, C**) remain unsecured.

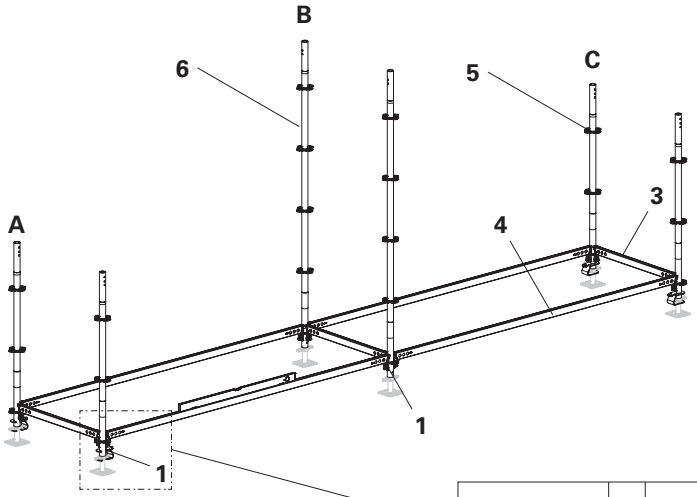

Fig. A1.02

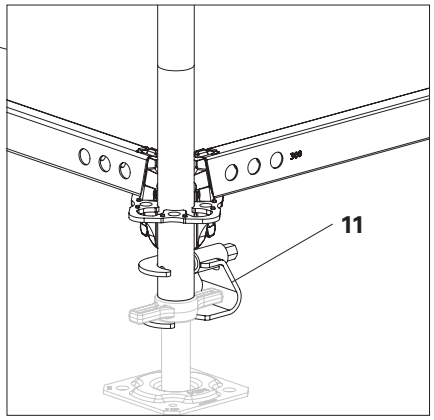

Fig. A1.02a

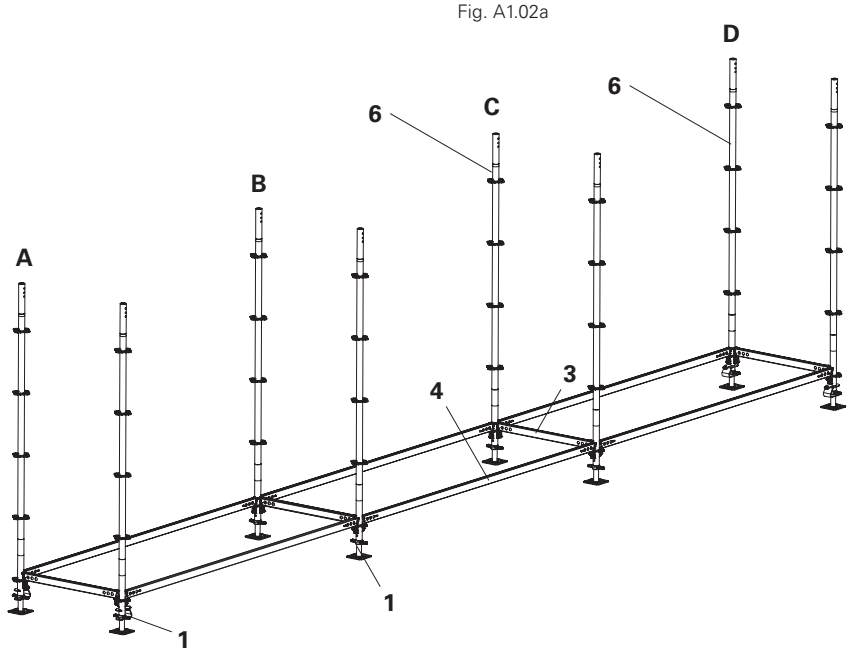

Fig. A1.03

Installing steel decks

1. Place Steel Decks UDG-2 300 (**7**) on the horizontal ledgers (**3**) one after the other.
2. Lift locks (**7.1**) drop beneath the crossbar and secure the deck. (Fig. A1.04 – Fig. A1.04a)
   → The deck is now installed.

→ The base level is now installed.

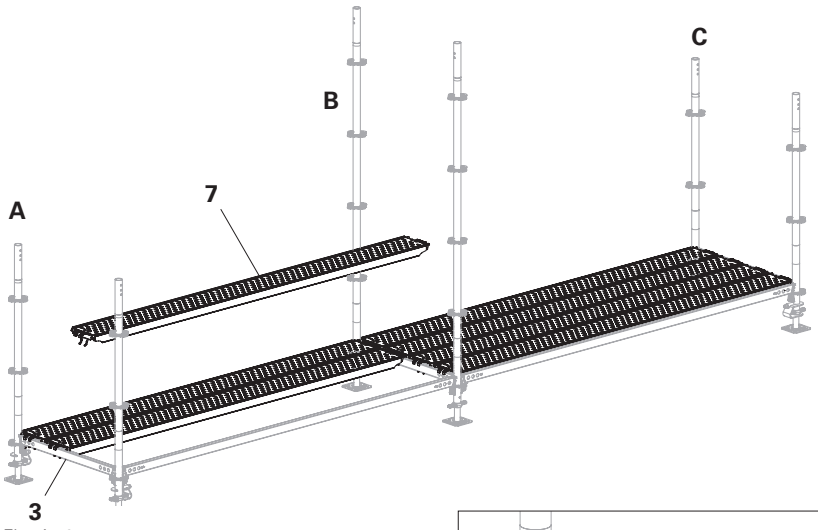

Fig. A1.04

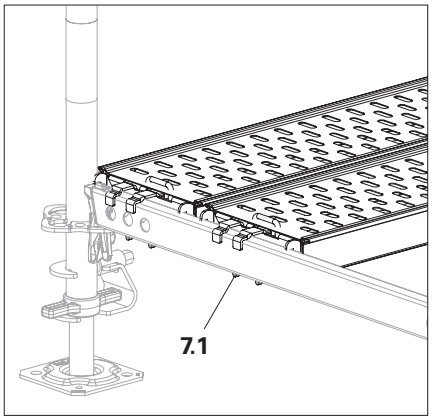

Fig. A1.04a

Installing the braces

Components

8 Node Brace UBK-2 300/200

Assembly

- In the case of a span of 6 m:

1. Fit the Node Braces UBK-2 300/200 (**8**) onto the edge frame columns (**A + C**) using the lowest rosettes of the top standards. Fit them onto the rosettes on the centre frame column (**B**) at a height of 2 m. (Fig. A1.05)

- In the case of a span of 9 m:

1. Fit the Node Braces UBK-2 300/200 onto the edge frame columns (**A + D**) using the rosettes at a height of 2 m. Fit them onto the centre frame columns (**B + C**) using the lowest rosettes of the top standards. (Fig. A1.06)

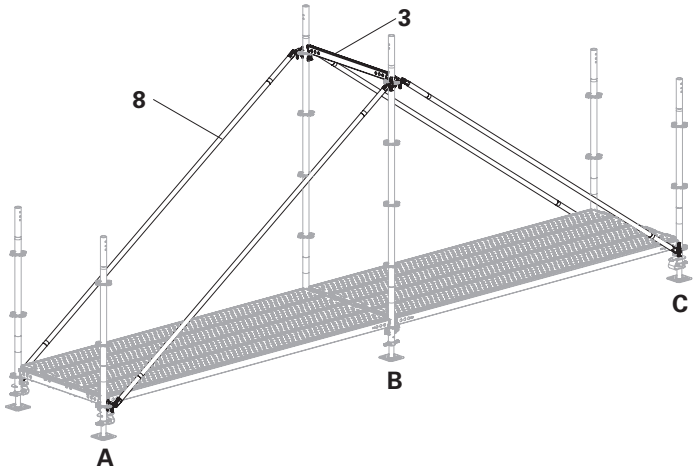

Fig. A1.05

Fitting the horizontal ledgers

Components

3 Horizontal Ledger UH-2 100
4 Horizontal Ledger UH-2 300
9 Horizontal Brace UBH Flex 300/100

Assembly

- In the case of a span of 6 m:

1. Connect the top standards (**B**) at a height of 2 m in the transverse direction with Horizontal Ledger UH-2 100 (**3**). (Fig. A1.05)

- In the case of a span of 9 m:

1. Connect all top standards at a height of 2 m in the transverse direction with Horizontal Ledger UH-2 100 (**3**).
2. Connect all top standards in the longitudinal direction with Horizontal Ledgers UH-2 300 (**4**).
3. Install Horizontal Braces UBH (**9**). (Fig. A1.06)

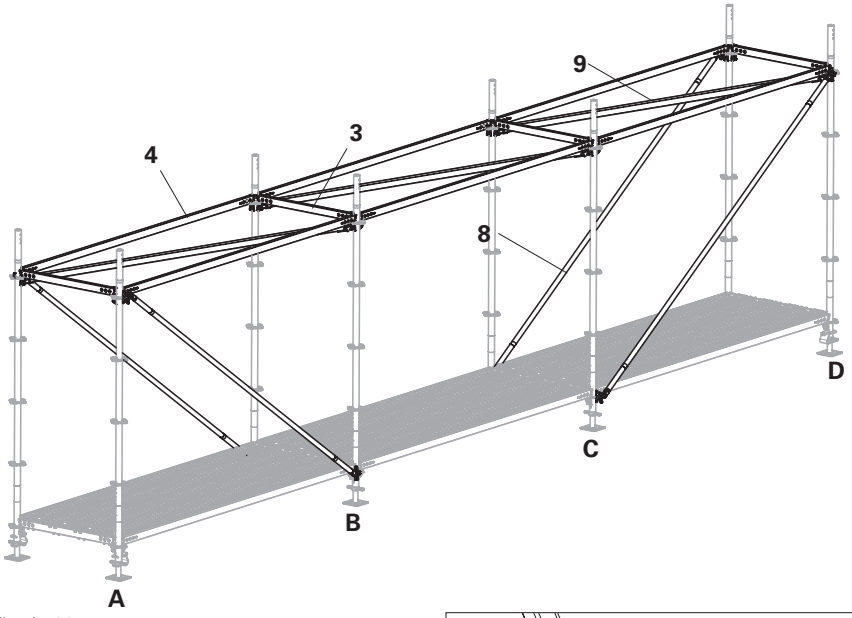

Fig. A1.06

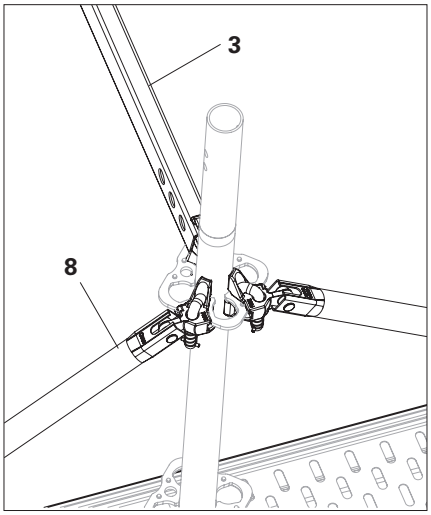

Fig. A1.06a

Lateral protection

Components

4 Horizontal Ledger UH-2 300
10 Steel Toe Board UPY 300

Assembly

1. Install Horizontal Ledgers UH-2 300 (**4**) as guardrail posts.
2. Fit Toe Board UPY (**10**). (Fig. A1.07, Fig. A1.08)

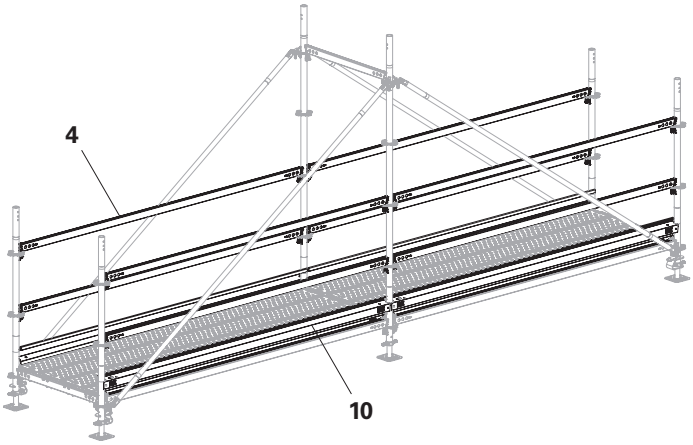

Fig. A1.07

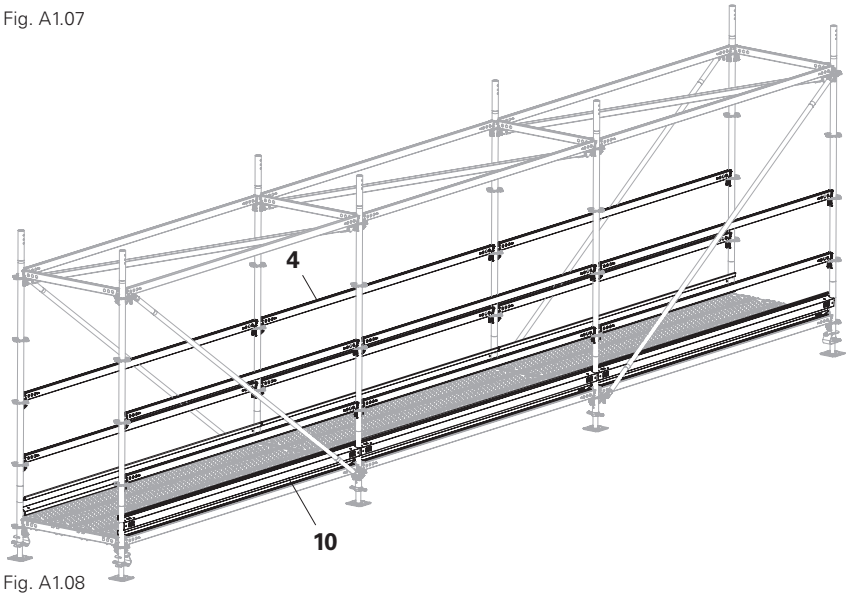

Fig. A1.08

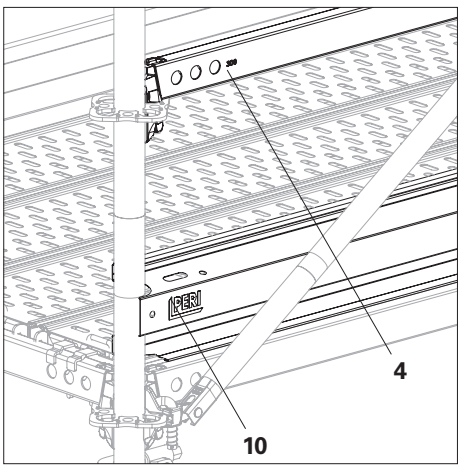

Fig. A1.08a

Attaching to the crane

- In the case of a span of 6 m:

1. Fit a Horizontal Ledger UH-2 (**3**) between the uppermost rosettes of the edge frame columns.
2. Attach with textile lifting gear, e.g. round sling, beneath the uppermost rosettes of the edge frame columns **(A + C**). (Fig. A2.01)
3. Once the crane has been moved, remove the horizontal ledgers (**3**) that are fitted as crossbars.

Alternatively:
Attach around the base spindles (**1**) of the edge frame columns.

- In the case of a span of 9 m:

1. Attach with textile lifting gear, e.g. round sling, beneath the uppermost rosettes of the centre frame columns (**B + C**). (Fig. A2.02)

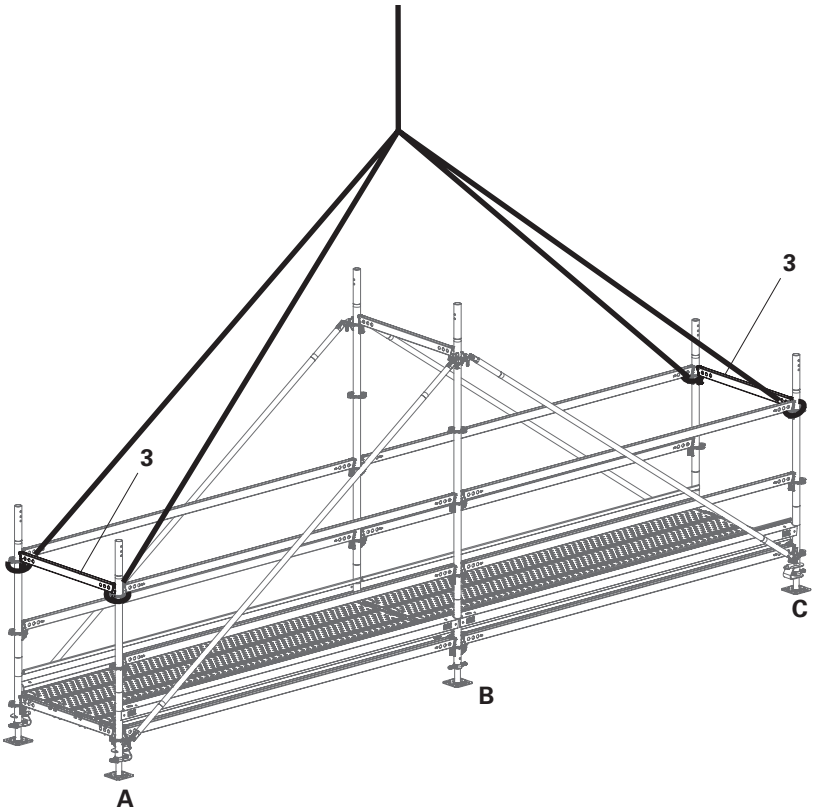

Fig. A2.01

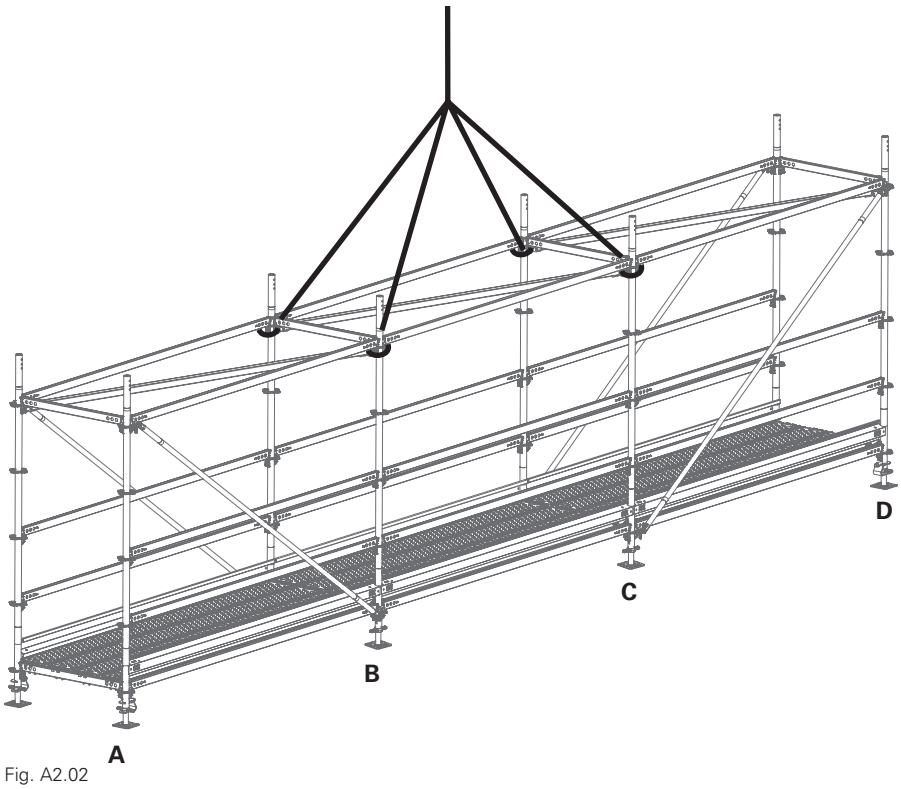

Fig. A2.02

Moving by crane

Only vertical crane transportation is permitted.

Before moving the crane, it must always be ensured that:
- the base spindle locks of the edge frame columns are fitted,
- all deck levels have additional bracing using horizontal ledgers,
- all wedges have been securely fixed in place using a hammer,
- all locks against lifting are engaged,
- all guardrails are at their end position,
- In strong winds, the Toe Boards UPY and the Toe Boards UPF must be additionally secured.
- Do not stand under suspended loads, guide the scaffold with ropes.

1. Raise the trench bridge approx. 30 cm with the crane.
2. Check that the base spindles (**1**) of the centre frame columns (**B**) (Fig. A2.03) or (**B + C**) (Fig. A2.04) have come to a stop on the assembly surface. Otherwise loosen the base spindles by hand and set them down.
3. Move the trench bridge to the place of use.
4. Adjust the base spindles to suit the substrate and align the trench bridge.

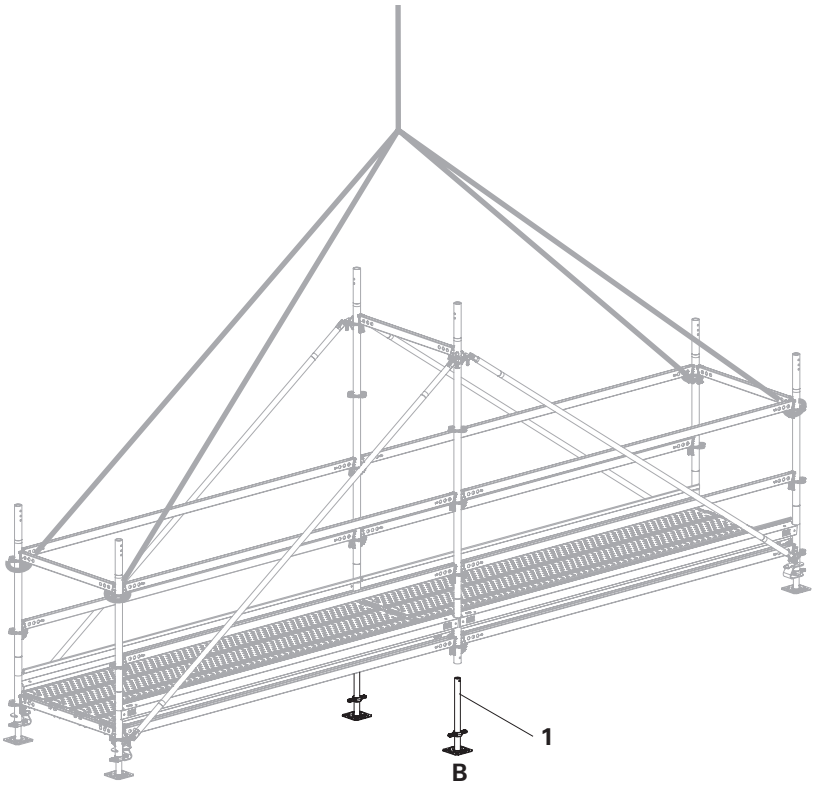

Fig. A2.03

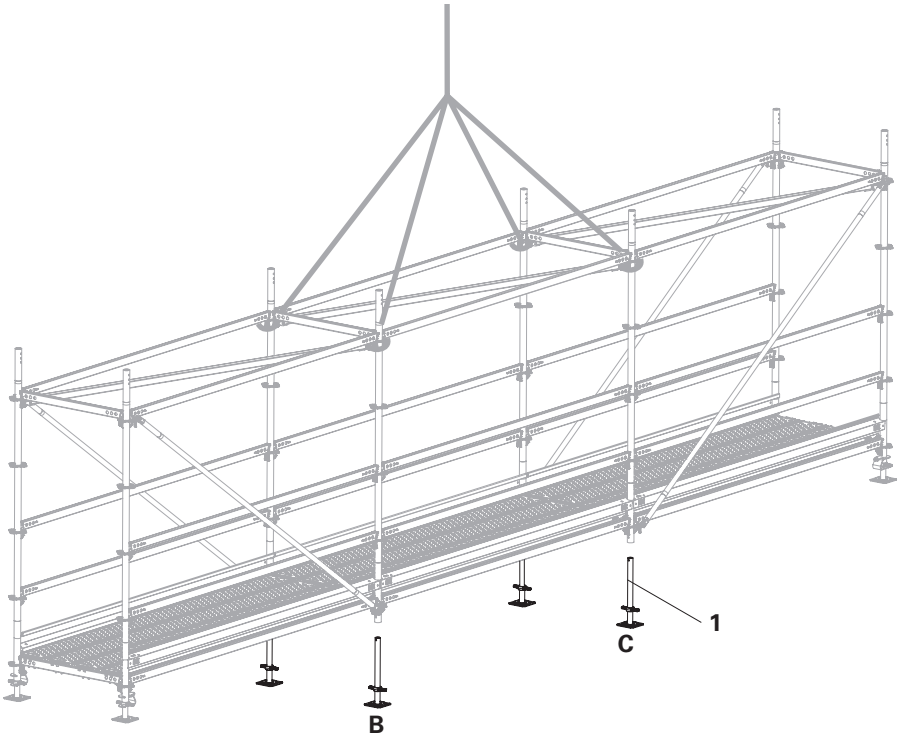

Fig. A2.04

A3 Support forces

Trench Bridge	Span 6 m	Span 9 m
Span	2 x 3.0 m = 6.0 m	3 x 3.0 m = 9.0 m
Width	100 cm	
Clear passage width	84 cm	
Load assumptions according to EN 12810/12811		
Live load	Load class 3 (2.0 kN/m² as uniformly distributed surface load) 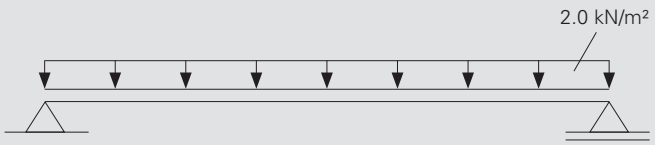 	
Wind load	0.2 kN/m² (approx. 65 km/h) If the specified wind loads are exceeded, the application on the trench bridge must be discontinued; if the maximum wind load is exceeded, the trench bridge must be additionally secured by the contractor using appropriate measures.	
Max. spindle extension	30 cm	
Max. inclined position	longitudinal: 5° For larger inclinations, the structural stability must be considered separately. In the case of inclined use, PERI recommends the Pivoting Base Spindle UJS 38-80/50.	
Support forces		
Vertical	max. V = 4.60 kN	max. V = 7.11 kN
Horizontal	max H = 0.36 kN	max H = 0.63 kN

A3 Support forces

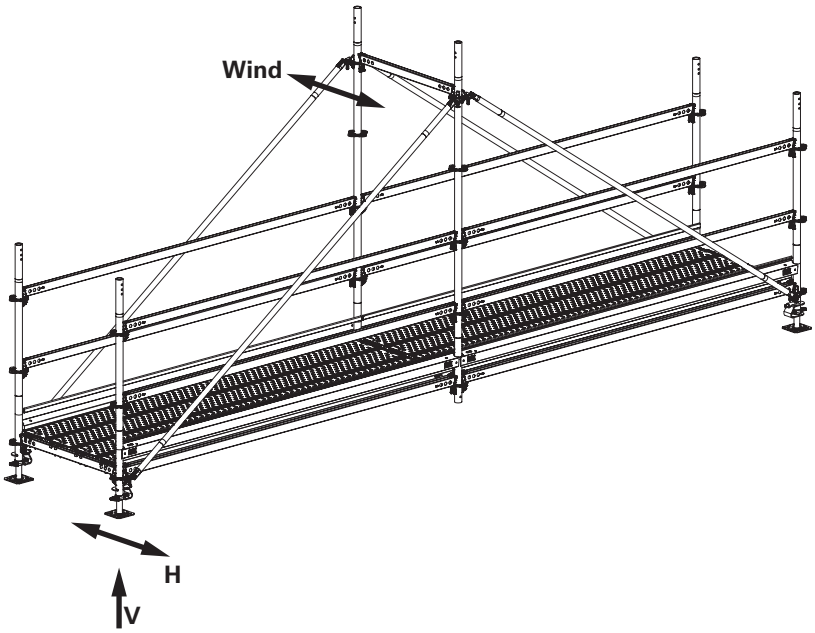

Fig. A3.01

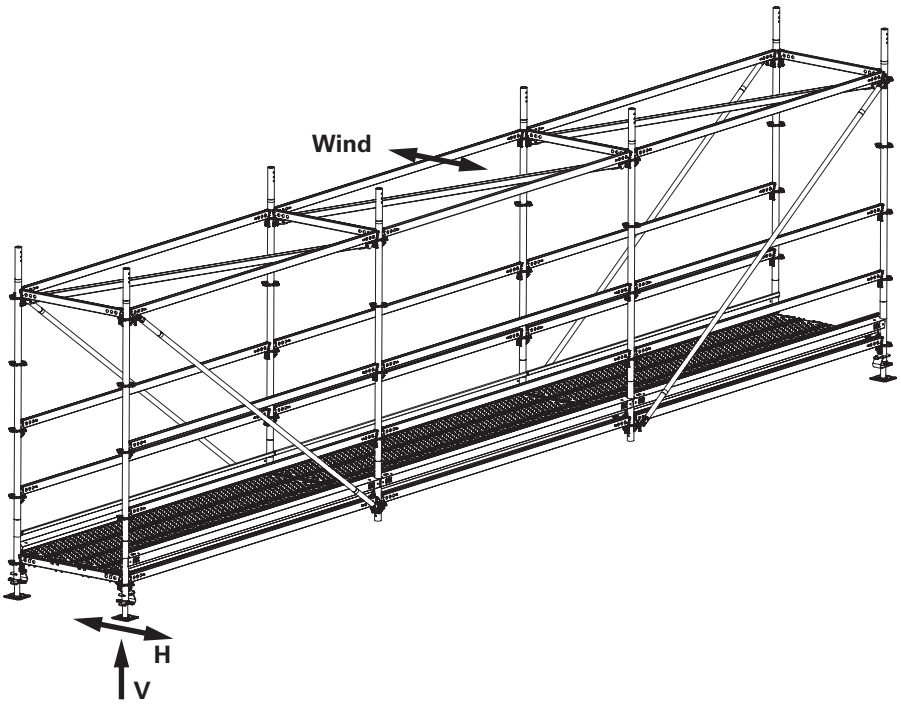

Fig. A3.02

Article no.	Weight kg	
400411	3.390	**Base Spindle UJB 38-50/30**

Note
With captive red quick jack nut.

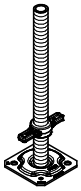

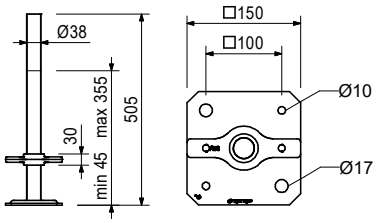

Accessories

100863	1.020	**Spindle Locking UJS**

			L	X
		Horizontal Ledger UH Plus		
414613	1.420	**Horizontal Ledger UH 25 Plus**	204	250
414595	2.070	**Horizontal Ledger UH 50 Plus**	454	500
429982	2.520	**Horizontal Ledger UH 67 Plus**	624	670
414629	2.730	**Horizontal Ledger UH 75 Plus**	704	750
414632	4.390	**Horizontal Ledger UH 100 Plus**	954	1,000
414638	5.340	**Horizontal Ledger UH 125 Plus**	1,204	1,250
414641	4.720	**Horizontal Ledger UH 150 Plus**	1,454	1,500
417032	5.380	**Horizontal Ledger UH 175 Plus**	1,704	1,750
414645	6.040	**Horizontal Ledger UH 200 Plus**	1,954	2,000
416356	6.700	**Horizontal Ledger UH 225 Plus**	2,204	2,250
414648	7.360	**Horizontal Ledger UH 250 Plus**	2,454	2,500
414651	8.680	**Horizontal Ledger UH 300 Plus**	2,954	3,000

Note
With length marking for easier identification.

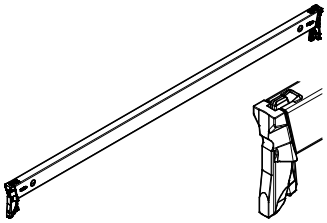

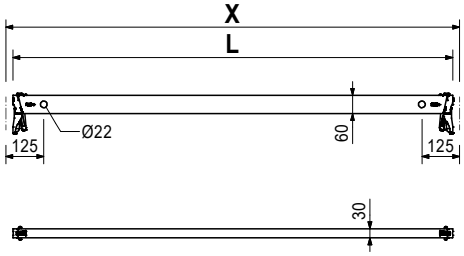

			L	X
		Horizontal Ledger UH-2		
131995	1.410	**Horizontal Ledger UH-2 25**	204	250
133900	1.590	**Horizontal Ledger UH-2 33**	284	330
131998	2.030	**Horizontal Ledger UH-2 50**	454	500
133903	2.480	**Horizontal Ledger UH-2 67**	624	670
132213	2.690	**Horizontal Ledger UH-2 75**	704	750
132004	3.740	**Horizontal Ledger UH-2 100**	954	1,000
132007	4.510	**Horizontal Ledger UH-2 125**	1,204	1,250
132010	4.680	**Horizontal Ledger UH-2 150**	1,454	1,500
132013	5.340	**Horizontal Ledger UH-2 175**	1,704	1,750
132016	6.000	**Horizontal Ledger UH-2 200**	1,954	2,000
132019	6.660	**Horizontal Ledger UH-2 225**	2,204	2,250
132025	7.320	**Horizontal Ledger UH-2 250**	2,454	2,500
132022	8.650	**Horizontal Ledger UH-2 300**	2,954	3,000

Note
With length marking for easier identification.

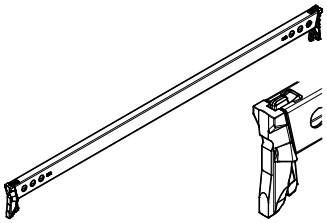

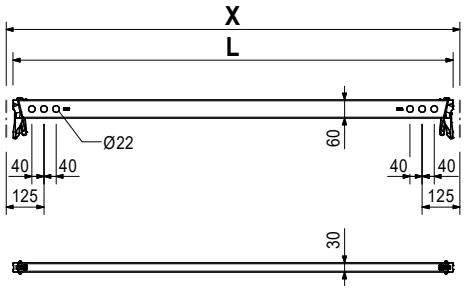

Article no.	Weight kg	Top Standards UVH	L
401309	2.510	**Top Standard UVH 50**	500
400000	4.610	**Top Standard UVH 100**	1,000
417195	7.600	**Top Standard UVH 125**	1,250
400003	6.920	**Top Standard UVH 150**	1,500
400005	9.240	**Top Standard UVH 200**	2,000
400007	11.500	**Top Standard UVH 250**	2,500

Without pin for mounting head spindles.

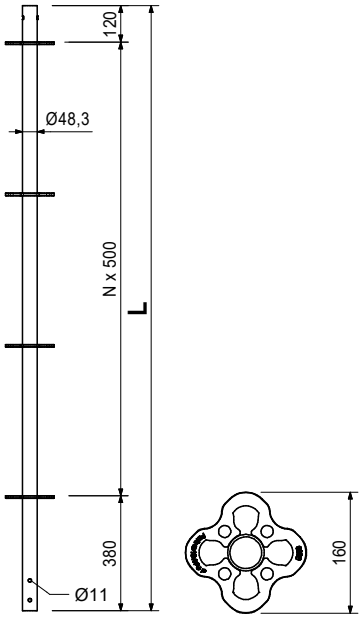

		Top Standards UVH-2	L
132123	2.100	**Top Standard UVH-2 50**	500
132194	4.210	**Top Standard UVH-2 100**	1,000
132196	6.060	**Top Standard UVH-2 125**	1,250
132198	6.310	**Top Standard UVH-2 150**	1,500
132200	8.420	**Top Standard UVH-2 200**	2,000
132202	10.500	**Top Standard UVH-2 250**	2,500

Without pin for mounting head spindles.

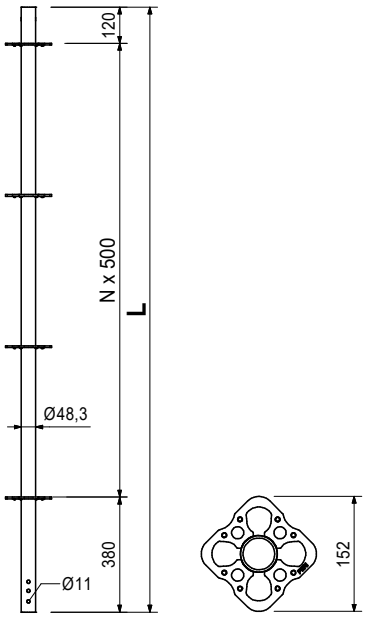

PERI UP Flex Trench Bridge

Article no.	Weight kg	Steel Decks UDG	X	perm. p [kN/m²]	max. p [kN/m²]
424124	3.880	**Steel Deck UDG 25 x 50**	500	6.0	40.0
432858	4.810	**Steel Deck UDG 25 x 67**	670	6.0	40.0
424121	5.260	**Steel Deck UDG 25 x 75**	750	6.0	40.0
424118	6.630	**Steel Deck UDG 25 x 100**	1,000	6.0	40.0
424115	8.010	**Steel Deck UDG 25 x 125**	1,250	6.0	28.4
424112	9.410	**Steel Deck UDG 25 x 150**	1,500	6.0	19.6
424109	12.200	**Steel Deck UDG 25 x 200**	2,000	6.0	10.9
423771	14.900	**Steel Deck UDG 25 x 250**	2,500	4.5	6.9
424915	17.700	**Steel Deck UDG 25 x 300**	3,000	3.0	4.7

Fit onto Horizontal Ledgers UH.

Note
Values corresponding to EN 12811-1.
max. p = max. possible surface load without deflection restriction.

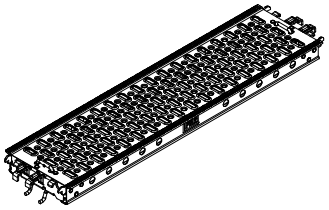

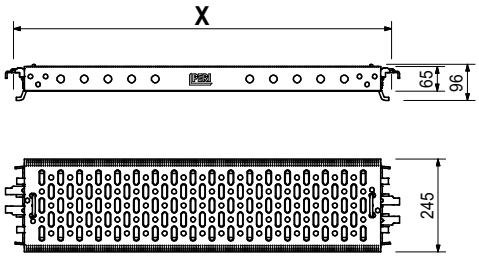

Article no.	Weight kg	Steel Decks UDG-2	X	perm. p [kN/m²]
132479	3.190	**Steel Deck UDG-2 25 x 50**	500	6.0
132483	3.960	**Steel Deck UDG-2 25 x 67**	670	6.0
132488	4.320	**Steel Deck UDG-2 25 x 75**	750	6.0
132492	5.450	**Steel Deck UDG-2 25 x 100**	1,000	6.0
132502	6.590	**Steel Deck UDG-2 25 x 125**	1,250	6.0
132505	7.730	**Steel Deck UDG-2 25 x 150**	1,500	6.0
132508	10.500	**Steel Deck UDG-2 25 x 200**	2,000	6.0
132511	12.900	**Steel Deck UDG-2 25 x 250**	2,500	4.5
132515	15.800	**Steel Deck UDG-2 25 x 300**	3,000	3.0

Length X: 500 - 1,500 with H of 45 mm.
Length X: 2,000 - 2,500 with H of 60 mm.
Length X: 3,000 with H of 70 mm.

Note
Values correspond with EN 12811-1.

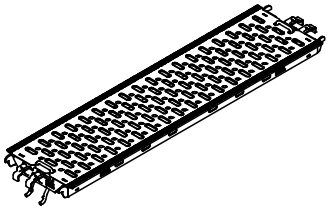

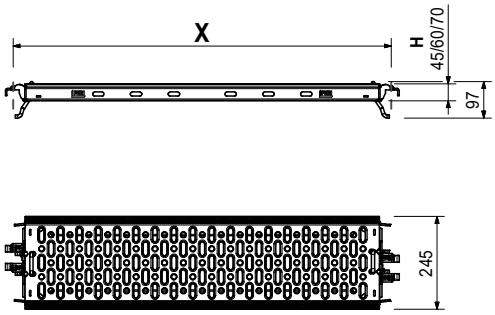

Article no.	Weight kg	Node Brace UBK	L	X	Y
424170	6.770	**Node Brace UBK 75/200**	2,190	750	2,000
412926	6.980	**Node Brace UBK 100/200**	2,285	1,000	2,000
415354	5.210	**Node Brace UBK 125/100**	1,625	1,250	1,000
412765	7.250	**Node Brace UBK 125/200**	2,401	1,250	2,000
400981	5.700	**Node Brace UBK 150/100**	1,821	1,500	1,000
400973	6.570	**Node Brace UBK 150/150**	2,152	1,500	1,500
400572	7.590	**Node Brace UBK 150/200**	2,539	1,500	2,000
400985	6.780	**Node Brace UBK 200/100**	2,246	2,000	1,000
406630	7.500	**Node Brace UBK 200/150**	2,521	2,000	1,500
400573	8.380	**Node Brace UBK 200/200**	2,860	2,000	2,000
400989	7.930	**Node Brace UBK 250/100**	2,696	2,500	1,000
406624	8.530	**Node Brace UBK 250/150**	2,930	2,500	1,500
400574	9.300	**Node Brace UBK 250/200**	3,226	2,500	2,000
400993	9.120	**Node Brace UBK 300/100**	3,131	3,000	1,000
400575	10.300	**Node Brace UBK 300/200**	3,625	3,000	2,000

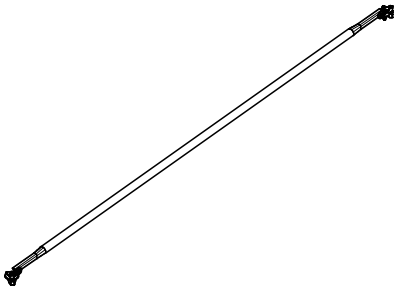

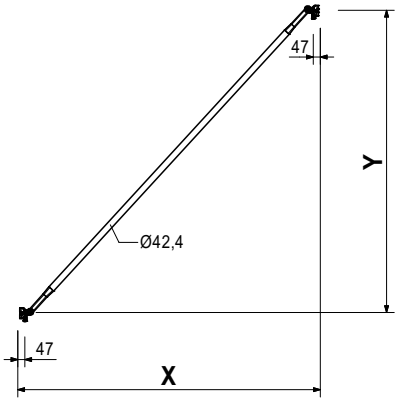

		Node Braces UBK-2	L	X	Y
133418	4.980	**Node Brace UBK-2 75/200**	2,190	750	2,000
133421	5.130	**Node Brace UBK-2 100/200**	2,285	1,000	2,000
133424	3.900	**Node Brace UBK-2 125/100**	1,625	1,250	1,000
133427	5.320	**Node Brace UBK-2 125/200**	2,401	1,250	2,000
133430	4.240	**Node Brace UBK-2 150/100**	1,821	1,500	1,000
133433	4.840	**Node Brace UBK-2 150/150**	2,152	1,500	1,500
133436	5.550	**Node Brace UBK-2 150/200**	2,539	1,500	2,000
133439	4.990	**Node Brace UBK-2 200/100**	2,246	2,000	1,000
133442	5.490	**Node Brace UBK-2 200/150**	2,521	2,000	1,500
133445	6.100	**Node Brace UBK-2 200/200**	2,860	2,000	2,000
133448	5.790	**Node Brace UBK-2 250/100**	2,696	2,500	1,000
133451	6.210	**Node Brace UBK-2 250/150**	2,930	2,500	1,500
133454	6.740	**Node Brace UBK-2 250/200**	3,226	2,500	2,000
133457	6.620	**Node Brace UBK-2 300/100**	3,131	3,000	1,000
133460	6.980	**Node Brace UBK-2 300/150**	3,356	3,000	1,500
133463	7.440	**Node Brace UBK-2 300/200**	3,625	3,000	2,000

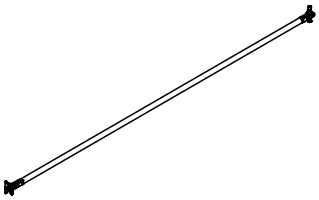

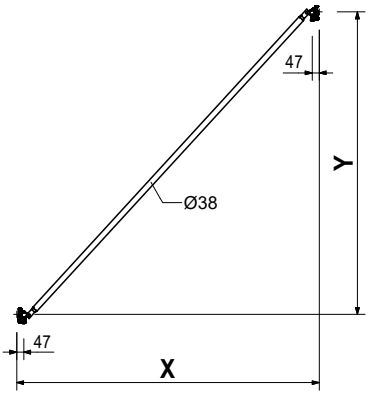

Article no.	Weight kg	Horizontal Braces UBH Flex	L	X	Y
114818	4.590	**Horizontal Brace UBH Flex 100/100**	1,335	1,000	1,000
114904	5.630	**Horizontal Brace UBH Flex 125/125**	1,689	1,250	1,250
114821	5.730	**Horizontal Brace UBH Flex 150/100**	1,725	1,500	1,000
114908	6.170	**Horizontal Brace UBH Flex 150/125**	1,874	1,500	1,250
114912	6.660	**Horizontal Brace UBH Flex 150/150**	2,042	1,500	1,500
114820	7.010	**Horizontal Brace UBH Flex 200/100**	2,161	2,000	1,000
124097	7.780	**Horizontal Brace UBH Flex 200/150**	2,422	2,000	1,500
114916	8.740	**Horizontal Brace UBH Flex 200/200**	2,749	2,000	2,000
114896	8.130	**Horizontal Brace UBH Flex 250/75**	2,541	2,500	750
114819	8.360	**Horizontal Brace UBH Flex 250/100**	2,620	2,500	1,000
114996	8.650	**Horizontal Brace UBH Flex 250/125**	2,720	2,500	1,250
124101	9.000	**Horizontal Brace UBH Flex 250/150**	2,838	2,500	1,500
114920	9.840	**Horizontal Brace UBH Flex 250/200**	3,123	2,500	2,000
114928	10.800	**Horizontal Brace UBH Flex 250/250**	3,456	2,500	2,500
114900	9.550	**Horizontal Brace UBH Flex 300/75**	3,025	3,000	750
114892	9.740	**Horizontal Brace UBH Flex 300/100**	3,092	3,000	1,000
124105	10.300	**Horizontal Brace UBH Flex 300/150**	3,279	3,000	1,500
114924	11.000	**Horizontal Brace UBH Flex 300/200**	3,528	3,000	2,000
114932	11.900	**Horizontal Brace UBH Flex 300/250**	3,826	3,000	2,500
114936	12.900	**Horizontal Brace UBH Flex 300/300**	4,163	3,000	3,000

For horizontal bracing of towers.
Can also be used underneath Decks UDG.

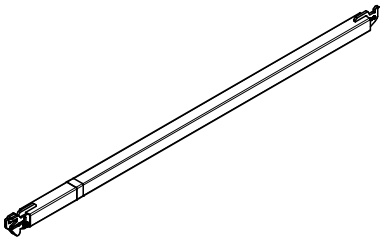

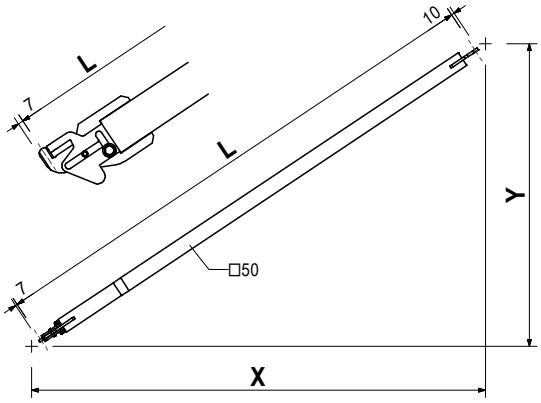

		Steel Toe Boards UPY	L	X
132592	0.414	**Steel Toe Board UPY 25**	236	250
110213	0.929	**Steel Toe Board UPY 50**	486	500
129947	1.280	**Steel Toe Board UPY 67**	656	670
110073	1.960	**Steel Toe Board UPY 100**	986	1,000
110160	2.990	**Steel Toe Board UPY 150**	1,486	1,500
110176	4.030	**Steel Toe Board UPY 200**	1,986	2,000
110208	5.060	**Steel Toe Board UPY 250**	2,486	2,500
110211	6.090	**Steel Toe Board UPY 300**	2,986	3,000

Note

- Default surface: galvanised and painted in yellow.

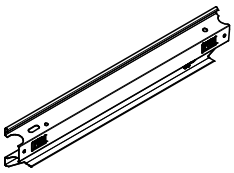

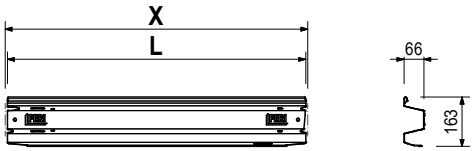

Article no.	Weight kg	Steel Toe Boards UPY-C	L	X
134643	0.414	**Steel Toe Board UPY 25-C**	236	250
134642	0.929	**Steel Toe Board UPY 50-C**	486	500
134641	1.280	**Steel Toe Board UPY 67-C**	656	670
134640	1.450	**Steel Toe Board UPY 75-C**	736	750
134639	1.960	**Steel Toe Board UPY 100-C**	986	1,000
134638	2.480	**Steel Toe Board UPY 125-C**	1,236	1,250
134637	2.990	**Steel Toe Board UPY 150-C**	1,486	1,500
134636	4.030	**Steel Toe Board UPY 200-C**	1,986	2,000
134635	5.060	**Steel Toe Board UPY 250-C**	2,486	2,500
134634	6.090	**Steel Toe Board UPY 300-C**	2,986	3,000

Customised toe board steel design in RAL colour scheme possible on request.

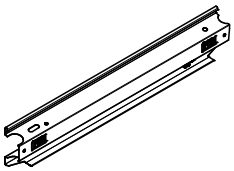

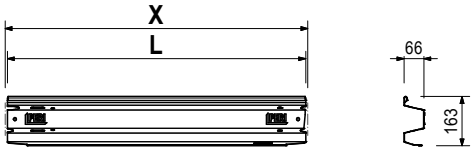

100863	1.020	**Spindle Locking UJS** Locks base spindles and section spindles Ø 38 mm in the vertical during moving procedures.

Technical data
Permissible load 1.5 kN.

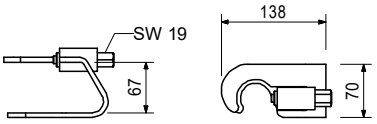

The optimal system for all projects and every requirement

Wall formwork

Column formwork

Slab formwork

Climbing systems

Bridge formwork

Tunnel formwork

Shoring

Working scaffolds construction

Working scaffolds facade

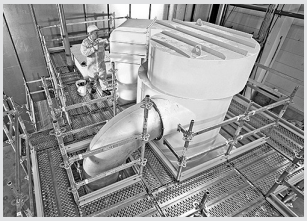

Working scaffolds industry

Means of access

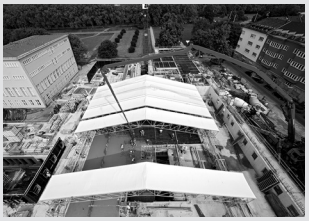

Safety scaffolds

Safety systems

System-independent accessories

Services

PERI Danmark A/S
Forskalling & Stilladssystemer
Greve Main 26
2670 Greve
Tlf. +45 4345.3627
peri@peri.dk
www.peri.dk

DK Int Version 2.1 | DO-22-0117403 © PERI DK