PERI UP Flex
Shoring Tower MDS K

Instructions for Assembly and Use – Standard Configuration – Version 2.1

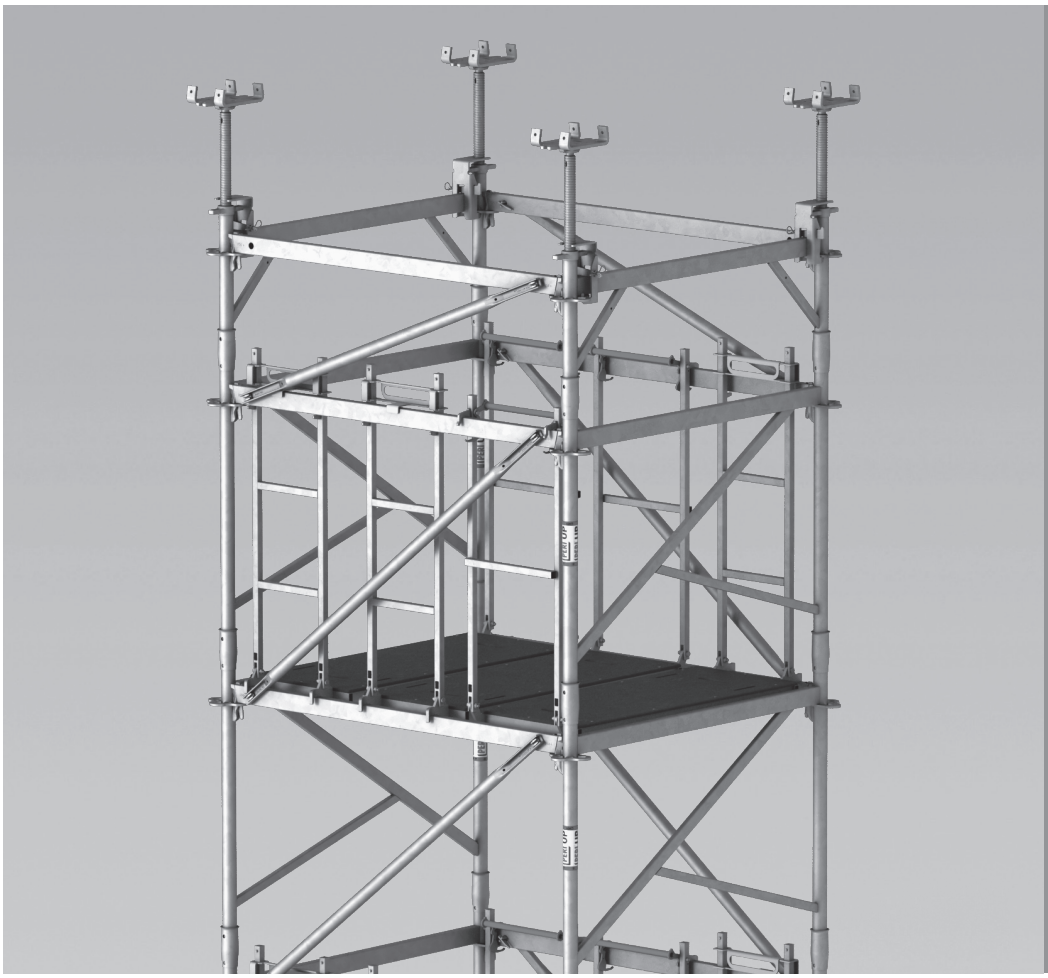

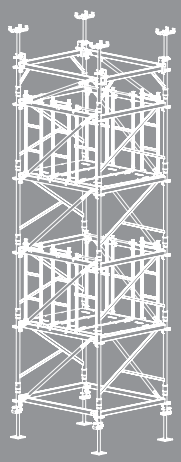

Content

Overview
Main components 3
Key 4

Introduction
Target groups 5
Product description 6
Intended use 6
Instructions for Use 6
Cleaning and maintenance instructions 7
Additional technical documentation 7

Safety instructions
Cross-system 8
System-specific 9

Standard configuration
A1 Assembly 10
Base unit 10
First frame plane 11
Deck level 12
Second frame plane 14
Moving the deck level 15
Additional levels 16
Material transport 17
Final level 18
Height adjustment 19
A2 Relocating 20
With a crane 20
Using the trolley with winch unit 22
A3 Dismantling 24
A4 Shoring tower with additional frames 25
A5 Support 26
Supporting individual tower 26
Bracing sets of shoring towers 27
A6 Storage and transportation 28
A7 Calculating material quantities 32

Tables
B1 Shoring tower – restrained at the top 34
Operating conditions 34
Perm. leg load F_V 35
B2 Shoring tower – free-standing 37
Operating conditions 37
Perm. leg load F_V 37
B3 Shoring tower with additional frames – restrained at the top 38
Operating conditions 38
Perm. leg load F_V 39

Program overview
PERI UP Flex – Shoring Tower MDS K 40

Overview

Main components

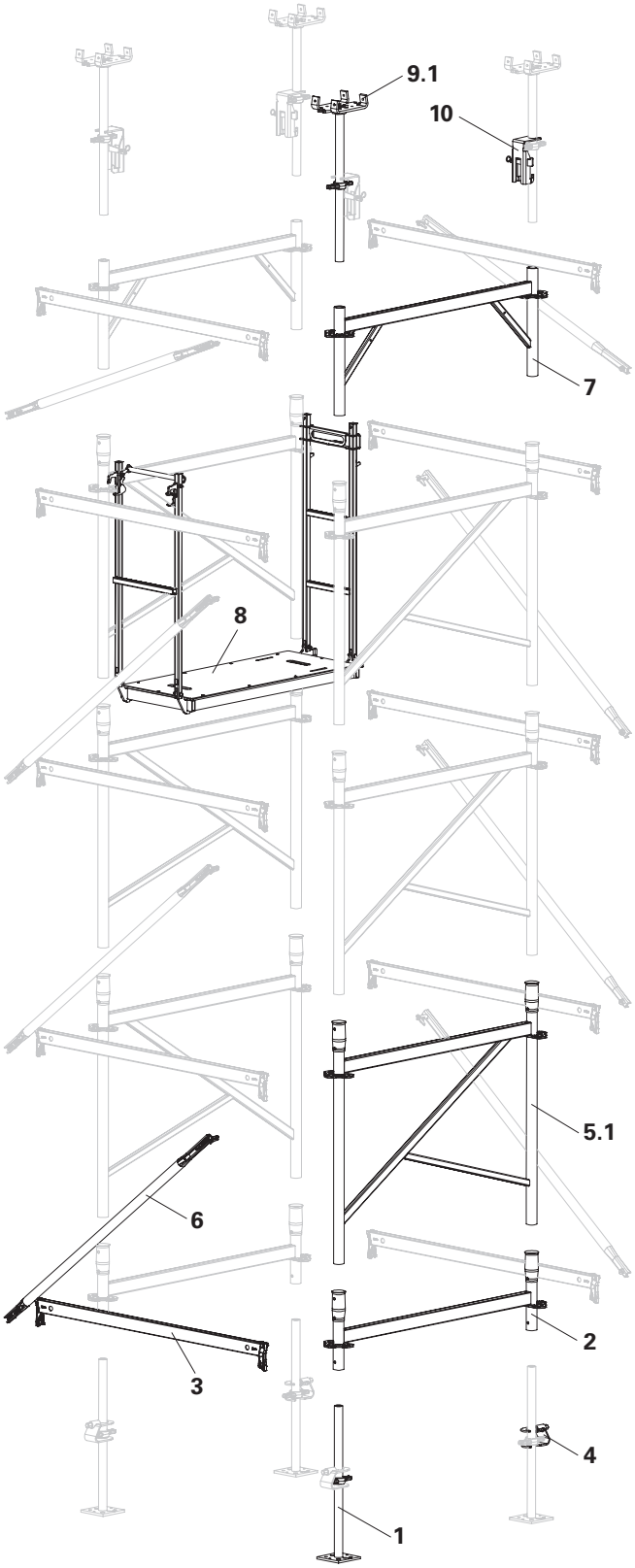

Fig. 01

1 Base Spindle TR 38-70/50
alternative:
Base Spindle UJB 38-50/30
(not shown)
2 Base Frame MDS
3 Horizontal Ledger UH Plus
4 Spindle Locking UJS – as required
5.1 Frame MDS 100 K
5.2 Intermediate Frame MDS 50 –
as required (not shown)
6 Ledger Brace UBL
7 End Frame MDS 50
8 Deck MDS 125
9.1 Pivoting Head Spindle-2 TR 38-70/50
alternative:
9.2 Crosshead Spindle TR 38-70/50
(not shown)
10 Head Spindle Locking UJH –
as required

Key

Pictogram | Definition

- Danger/Warning/Caution
- Note
- To be complied with
- Load-bearing point
- Visual inspection
- Tip
- Incorrect use

Arrows

- Arrow representing an action
- Arrow representing a reaction of an action*
- Arrow representing forces

* If not identical to the action arrow.

Safety instruction categories
The safety instructions alert site personnel to the risks involved and provide information on how to avoid these risks. Safety instructions can be found at the beginning of the section or before instructions for action and are highlighted as follows:

Danger
This sign indicates an extremely hazardous situation which could result in death or serious, irreversible injury if the safety instructions are not followed.

Warning
This sign indicates a hazardous situation which could result in death or serious, irreversible injury if the safety instructions are not followed.

Caution
This sign indicates a hazardous situation which could result in minor or moderate injury if the safety instructions are not followed.

Note
This sign indicates situations in which failure to observe the information can result in material damage.

Format of the safety instructions

Signal word
Type and source of hazard!
Consequences of non-compliance.
⇒ Preventative measures.

Dimensions
Dimensions are usually given in cm. Other measurement units, e.g. m, are shown in the illustrations.

Conventions

- Instructions are numbered with: 1. ....., 2. ....., 3. .....
- The result of an instruction is shown by: →
- Position numbers are clearly provided for the individual components and are given in the drawing, e.g. **1**, in the text in brackets, for example (**1**).
- Position numbers:
  - variants of components are extended with point and number, e.g. **5.1**.
  - sub-components of a component are extended using lower case letters, e.g. **5a**.
  - multiple position numbers, i.e. alternative components, are represented with a slash: e.g. **1/2**.

Notes on illustrations
The illustration on the front cover of these instructions is understood to be a system representation only. The assembly steps presented in these Instructions for Assembly and Use are shown in the form of examples with only one component size. They are valid for all component sizes contained in the standard configuration.

To facilitate understanding, detailed illustrations are sometimes incomplete. The safety equipment which might not have been shown in these detailed illustrations must nevertheless be available.

Target groups

Contractors
These Instructions for Assembly and Use are designed for contractors who
- assemble, modify and dismantle the scaffolding, or
- use them, e.g. for pouring concrete, or
- allow them to be used, e.g. for forming operations.

Safety and Health Protection Coordinator*
- is appointed by the client,
- must identify potential hazards during the planning phase,
- determines measures that provide protection against risks,
- creates a safety and health protection plan,
- coordinates the protective measures for the contractor and site personnel so that they do not endanger each other,
- monitors compliance with the protective measures.

Competent person
- is appointed by the scaffolding contractor,
- must be on site for all scaffolding work,
- prepares and updates the plan for assembly, modification and dismantling,
- prepares and updates the plan for use of the scaffold by the scaffold user,
- supervises the assembly, modification and dismantling work (supervisor)

Competent persons qualified to carry out inspections
Due to the specialist knowledge gained from professional training, work experience and recent professional activity, the competent person qualified to carry out inspections has a reliable understanding of safety-related issues and can carry out inspections correctly. Depending on the complexity of the inspection to be undertaken, e.g. scope of testing, type of testing or the use of certain measuring devices, a range of specialist knowledge is necessary.

Qualified personnel
Scaffolds may only be assembled, modified or dismantled by personnel who are suitably qualified to do so. Qualified personnel must have completed a course of training** in the work to be performed, covering the following points at least:
- Explanation of the plan for the assembly, modification or dismantling of the scaffolding in an understandable form and language.
- Description of the measures for safely assembling, modifying or dismantling the scaffold.
- Naming of the preventive measures to be taken to avoid the risk of persons and objects falling.
- Designation of the safety precautions in the event of changing weather conditions that could adversely affect the safety of the scaffolding, as well as the personnel concerned.
- Details regarding permissible loads.
- Description of all other risks and dangers associated with assembly, modification or dismantling operations.

- **In other countries, ensure that the relevant national guidelines and regulations in the respective current version are complied with!**
- **If no country-specific regulations are available, it is recommended to proceed according to German guidelines and regulations.**
- **A competent person must be present on site during scaffolding operations.**

* Valid in Germany: Regulations for Occupational Health and Safety on Construction Sites 30 (RAB 30).

** Instructions are given by the contractor themselves or a competent person selected by them.

Product description

Purpose of these assembly instructions
These Instructions for Assembly and Use describe the standard configuration for shoring tower or Shoring Tower Groups MDS K with and without additional frames.

The PERI UP Flex Shoring Tower MDS K
- provides a safe working position also during vertical assembly and dismantling operations,
- enables a multitude of project-specific application possibilities.

Intended use
The PERI UP Flex Shoring Tower MDS K is used
- for transferring static, vertical, partially horizontal loads,
- in a systematic, vertical position.

PERI products have been designed for exclusive use in the industrial and commercial sectors only by suitably trained personnel.

Foreseeable misuse
The PERI UP Flex Shoring Tower MDS K is not approved for lifting or lowering loads.

Features
The PERI UP Flex Shoring Tower MDS K is used in shoring constructions in a systematic vertical position for transferring vertical and, in part, horizontal loads. The main feature of the PERI UP system is the particularly rigid node connection between the rosettes of the standards and the horizontal ledgers.

The frames of the shoring towers are connected with horizontal ledgers. The wedge connections of the horizontal ledgers are particularly easy to assemble. Bracing is installed in the form of system diagonals.

Through the combination of standard and intermediate elements in connection with the final end frame, all heights can be realised in a stepless manner.

System dimensions
Ground plans of the standard configuration
Frame direction x ledger direction
- 125 x 100 cm
- 125 x 150 cm – see Section A1
- 125 x 200 cm
- 125 x 250 cm
- 125 x 300 cm

The ground plan 125 x 125 cm is not permitted

Permissible load capacities
- Corresponding to Design Class B1 in accordance with DIN EN 12812.
- For leg loads, see Section B1 to B3.

Instructions for Use

Use in a way not intended, deviating from the standard configuration or the intended use according to the Instructions for Assembly and Use, represents a misapplication with a potential safety risk, e.g. risk of falling.

Deviations from the standard configuration must be verified for the application by means of separate strength and stability calculations (Industrial Safety Regulation Appendix 1, No. 3.2.1) and explicitly reflected in the assembly instructions.

All components listed in the program overview may be used for assembly. Other components are not permitted. Exceptions are named, or must be planned and verified on a project-specific basis.

The use of other products and spare parts is not allowed.
Changes to PERI components are not permitted.

The system described in these Instructions for Assembly and Use may contain patent-protected components.

Cleaning and maintenance instructions

Clean the scaffold components after each use to maintain the value and operational readiness of the PERI products over the long term.

Some repair work may also be inevitable due to the tough working conditions.

The contractor must ensure that the personal protective equipment required for cleaning, maintenance and repair work such as
- safety helmet,
- safety shoes,
- safety gloves,
- safety goggles,

is available and used as intended.

The following instructions should help to keep cleaning and maintenance costs as low as possible.

Cleaning tools must be adapted to the respective surfaces of the components so that they are not damaged.

Clean mechanical components, e.g. brackets, articulated connections before and after use to remove dirt or concrete residue, and grease them with suitable lubricants.
Spindle threads must not be greased.

Do not use plastic components if fibre reinforcements are exposed.

Provide suitable support for the components during cleaning so that no unintentional change in their position is possible.

Do not clean components suspended on crane lifting gear.

Components with wood parts are to be stored in well-ventilated and dry conditions.

Any repairs to PERI products are to be carried out by PERI qualified personnel only.

Disposal
Dispose of in accordance with the relevant national regulations.

Additional technical documentation

- Approval – Z-8.22-863 PERI UP Flex Module System
- Instructions for Assembly and Use
  - PERI UP Flex Shoring Tower
  - MULTIFLEX Girder Slab Formwork
- Assembly instructions for PERI UP Scaffolding Kit core components
- Instructions for Use
  - trolley with winch unit
  - pallets and stacking devices
- Data sheet – Tie bolt PERI 14/20 x 130
- PERI Design Tables – Formwork and shoring
- Product Brochure – PERI UP Flex Shoring Tower MDS K

Cross-system

General
The contractor must guarantee that the Instructions for Assembly and Use supplied by PERI are available at all times and understood by the site personnel.

These Instructions for Assembly and Use can be used as the basis for creating a risk assessment. The risk assessment is compiled by the contractor. However, these Instructions for Assembly and Use are not a substitute for a risk assessment!

Observe and comply with the safety instructions and permissible loads.

For the application and inspection of PERI products, the current safety regulations and guidelines valid in the respective countries must be observed.

Materials and working areas are to be inspected on a regular basis, especially before each use and assembly, for:
- Damage,
- Stability and
- Functional correctness.

Damaged components must be exchanged immediately on site and may no longer be used.

Safety components are to be removed only when they are no longer required.

Components provided by the contractor must comply with the characteristics stipulated in these Instructions for Assembly and Use and all applicable laws and standards. Unless otherwise indicated, the following applies in particular:
- Timber components: strength class C24 for solid wood according to EN 338.
- scaffold tubes: galvanised steel tubing with minimum dimensions Ø 48.3 x 3.2 mm according to EN 12811-1:2003 4.2.1.2.
- Scaffold tube couplings according to EN 74.

Deviations from the standard configuration are only permitted after a further risk assessment has been carried out by the contractor.
Appropriate measures for working and operational safety, as well as stability, are defined on the basis of this risk assessment.
Corresponding proof of stability can be provided by PERI on request, if the risk assessment and resulting measures to be implemented are made available.

Before and after exceptional occurrences that may have an adverse effect on the safety of the scaffolding system, the contractor must immediately
- produce another risk assessment and make use of its results to take suitable steps to guarantee the stability of the scaffolding system,
- arrange for an extraordinary inspection to be carried out by a competent person qualified to do so. The aim of this inspection is to identify and rectify any damage in good time in order to guarantee safe use of the scaffolding system.

Exceptional events could be:
- accidents,
- long periods of non-use,
- natural events, e.g. heavy rainfall, icing, heavy snowfall, storms or earthquakes.

Assembly, modification and dismantling work
Assembly, modification or dismantling of scaffolding systems may only be carried out by qualified persons under the supervision of a competent person. The qualified personnel must have received appropriate training for the work to be carried out with regard to specific risks and dangers.

On the basis of the risk assessment and the Instructions for Assembly and Use, the contractor must create installation instructions to ensure safe assembly, modification and dismantling of the shoring system.

Before initial use, the safe functioning of the scaffold must be checked by a person qualified to carry out the inspection. The results of the inspection must be documented in an inspection log.
The contractor must ensure that the personal protective equipment required for the assembly, modification or dismantling of the shoring system, e.g.
- safety helmet,
- safety shoes,
- safety gloves,
- safety goggles,

is available and used as intended.

If personal protective equipment against falling from a height (PPE) is required or specified in local regulations, the contractor must determine appropriate attachment points on the basis of the risk assessment.
The PPE against falling from a height that is to be used is determined by the contractor.

The contractor must
- Provide safe working areas for site personnel, which are to be reached through the provision of safe access ways. Cordon off and clearly mark danger zones.
- Guarantee stability during all stages of construction, in particular during assembly, modification and dismantling operations.
- Ensure and demonstrate that all loads that occur are safely transferred.

Use
Every contractor who uses or allows the scaffolding systems or sections of the scaffolding system to be used, is responsible for ensuring that the equipment is in good condition.

If the scaffolding system is used successively or at the same time by several contractors, the health and safety coordinator must point out any possible mutual hazards and all work must be then coordinated.

System-specific

Strike components only when the concrete has hardened sufficiently and the person in charge has given the go-ahead for striking to take place.

Anchoring is to take place only if the anchorage has sufficient concrete strength.

The load-distributing support used, such as planking, must match the respective substrate used. If several layers are required, planks are to be arranged crosswise.

Tighten couplings with screw closures using 50 Nm. This corresponds to a force of 20 kg using a lever arm length of 25 cm.

Tighten the wedge joints with a 500 g hammer using a jarring blow.

Protect shoring towers against impact loads, e.g. trucks. Impact loads are determined on a project-specific basis.

Base unit

- Dimension 150 in the direction of the horizontal ledgers is variable and shown here as an example. All components in the ledger direction, e.g. horizontal ledgers, are to be used according to their length. (Fig. A1.01)
- Spindle locking is optional and must only be integrated if the shoring tower is moved at a later time.

1	Base spindle	4x
2	Base Frame MDS	2x
3	Horizontal Ledger UH Plus	2x
4	Spindle Locking UJS – optional	4x

Assembly

1. Position four base spindles (1) on the ground in the form of a rectangle 1.25 x 1.50 m. (Fig. A1.01)
2. Place one base frame (2) on each of the two opposing base spindles, 1.25 m apart. (Fig. A1.01)
3. Attach the er head (3a) and wedge (3b) of the horizontal ledgers (3) to the rosettes (1a). (Fig. A1.01a)
4. Securely fix all wedges using a hammer. (Fig. A1.01b)
5. Ensure that the base unit is completely perpendicular.
6. Optional: fit spindle locking (4).
   - Insert spindle locking above the quick jack nut of the base spindle and ensure that the pin of the fixing screw (4a) is securely positioned in the hole on the standard (1b). (Fig. A1.01 + A1.02a)
   - Tighten the hex. nut of the spindle locking (4b). (Fig. A1.02b)
     → Base spindle is now secured.
7. Horizontally align the base unit.

Do the end plates of the base spindles have full-surface contact?

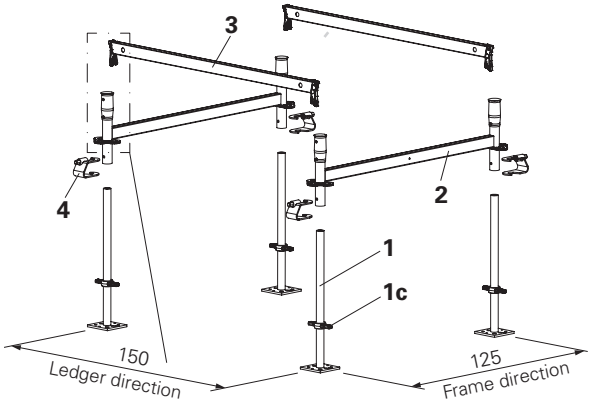

Fig. A1.01

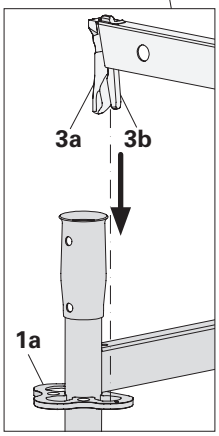

Fig. A1.01a

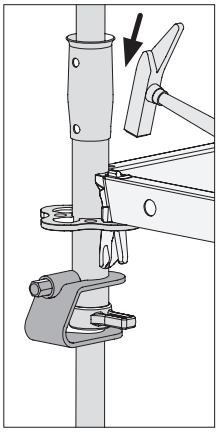
Fig. A1.01b

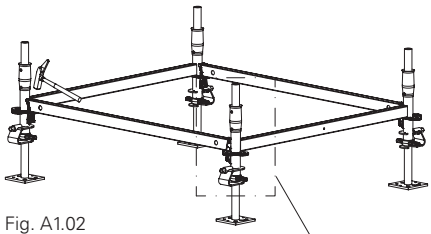
Fig. A1.02

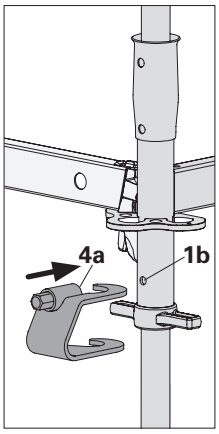

Fig. A1.02a

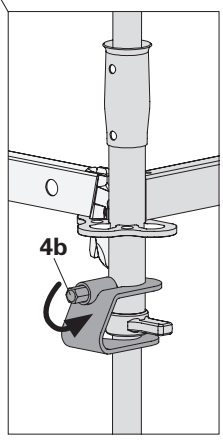

Fig. A1.02b

First frame plane

3	Horizontal Ledger UH Plus	2x
5.1	Frame MDS 100 K	2x
6	Ledger Brace UBL	1x

Assembly

1. Insert tubes of the frame (5.1) into the tubes of the base frame.
2. Install horizontal ledger (3).
3. Hammer all wedges into place.
4. Install one ledger brace (6) externally from the bottom left to top right.
   – Insert finger (6b) into the hole of the bottom horizontal ledger at an angle. (Fig. A1.04c + A1.04d)
   – Insert gravity pin (6a) through the hole of the top horizontal ledger, and then turn sideways. (Fig. A1.04a + A1.04b)
   → Ledger brace is now secured.

(Fig. A1.03 + A1.04)

Have all gravity pins been turned sideways? (Fig. A1.04b)

Fit the second Ledger Brace UBL at a later time so that the decks can be passed to the inside in a straightforward manner.

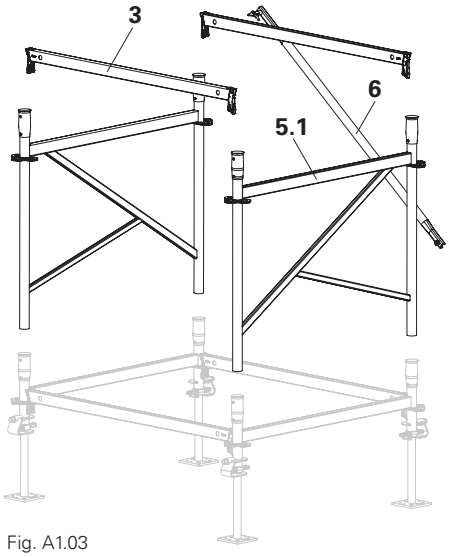

Fig. A1.03

Gravity pin – above

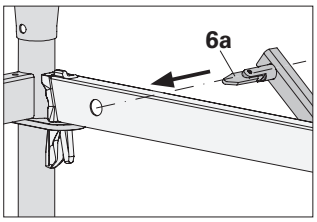

Fig. A1.04a

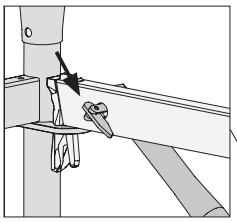

Fig. A1.04b

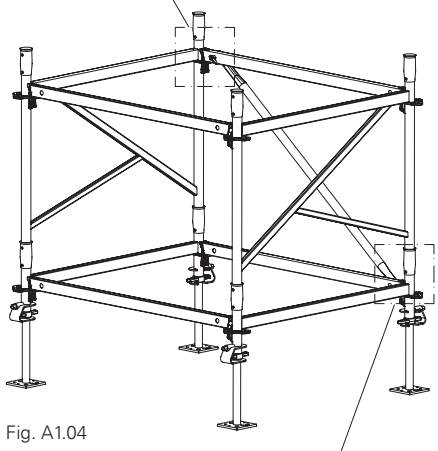

Fig. A1.04

Mounting finger – below

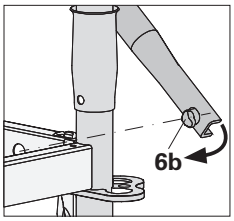

Fig. A1.04c

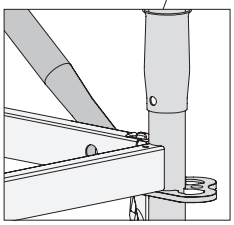

Fig. A1.04d

Deck level

- Fit the deck with both hooks (8a) of the red side on the side of the gravity pin of the ledger braces. (Fig. A1.06)
- Leave a 2 – 3 cm space between the assembly decks.

6	Ledger Brace UBL	1x
8	Deck MDS 125	3x*

* Number of decks (pieces) depends on the length (L) of the horizontal ledgers.

L	100	150	200	250	300
Qty	2x	3x	4x	5x	6x

Assembly

1. Suspend deck with both hooks (8a) of the red side above the beam of the horizontal ledger. (Fig. A1.05 + A1.06)
   Ensure that the outer hook (8a) is mounted between the standard (2c) and the end of the ledger brace (6c). (Fig. A1.05a)
2. Remove cotter pin (8g) from the underside of the deck. (Fig. A1.05b)
   → Deck fastening released.
3. Hold the deck board using the grip hole (8j) and fold downwards. (Fig. A1.06 + A1.07)
   → Both claws (8f) of the deck are resting on the horizontal ledger. (Fig. A1.07)
   → Counterholder (8b) is positioned below on the horizontal ledger as a lift lock. (Fig. A1.05a)

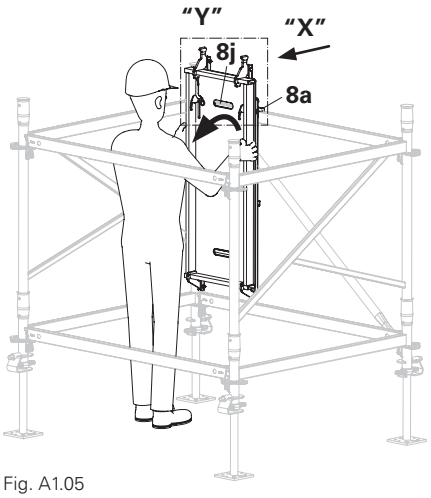

Fig. A1.05

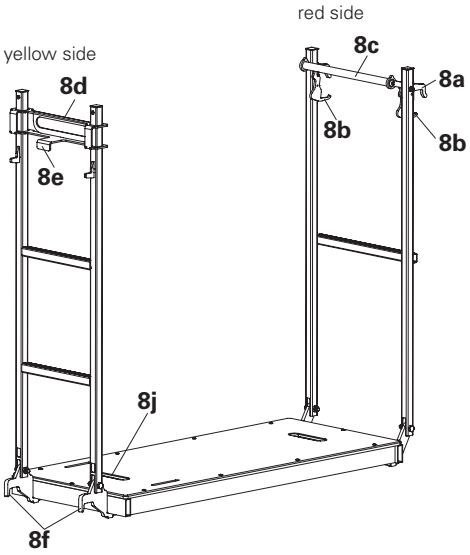

Fig. A1.06

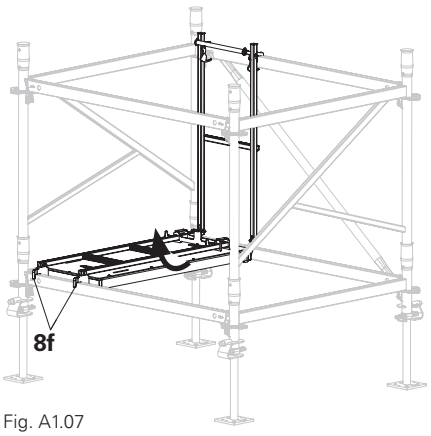

Fig. A1.07

View "X" – shown without the yellow side

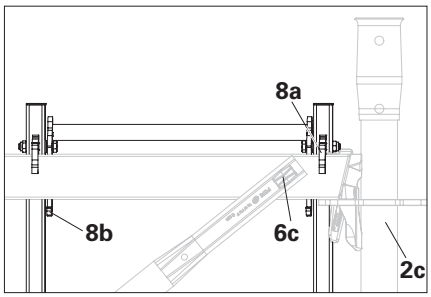

Fig. A1.05a

Detail "Y"

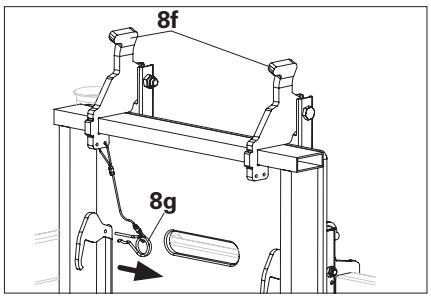

Fig. A1.05b

4. Pull yellow bar (8d) upwards and suspend yellow lug (8e) above the top horizontal ledger. (Fig. A1.07 + A1.08)
   → Deck is now installed.
5. Install other decks in the same way as the first deck, as described in points 1 – 4.
6. Install the final deck, positioned at 180° to the other decks. (Fig. A1.09)
   – Fit the hooks (8a) on the red side next to the yellow lug of the previous deck.
   – On the other side, fit the yellow lug next to the red hooks.
7. Fit Ledger Brace UBL (6). (Fig. A1.10)

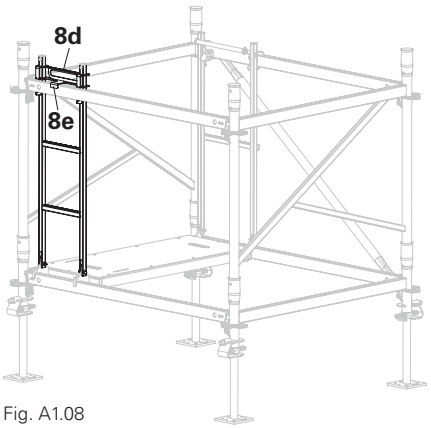

Fig. A1.08

– Is the red tipping bar (8c) folded downwards?
– Is the yellow lug (8e) positioned against the horizontal ledger?
– Are the claws (8f) on the yellow side resting on the horizontal ledger?
(Fig. A1.09)

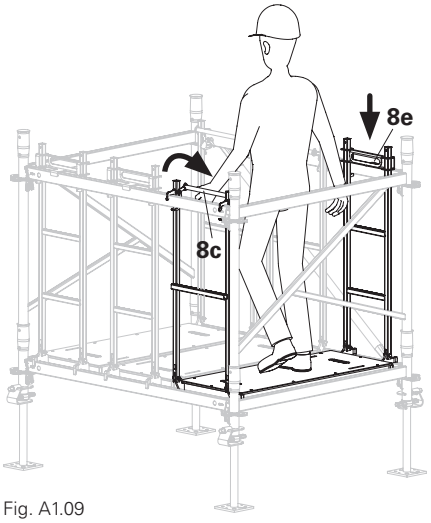

Fig. A1.09

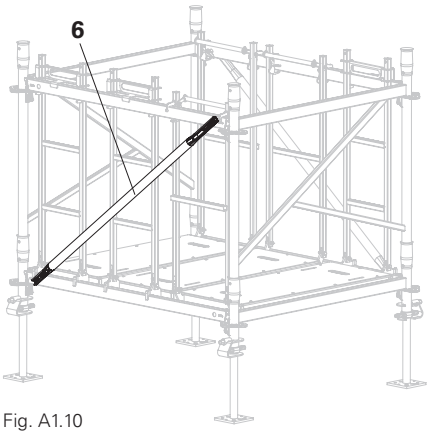

Fig. A1.10

Second frame plane

3	Horizontal Ledger UH Plus	2x
5.1	Frame MDS 100 K	2x
6	Ledger Brace UBL	2x

Assembly

1. Position frame (5.1) against the sleeves of the frame below at an inclination of approx. 45°. (Fig. A1.11)
2. Place frame in a vertical position.
   → Frame slides downwards to the required position through its own weight.
3. Install horizontal ledger (3). (Fig. A1.12)
4. Fit ledger brace (6). (Fig. A1.13)

Are all gravity pins secured, i.e. have all gravity pins been turned sideways?

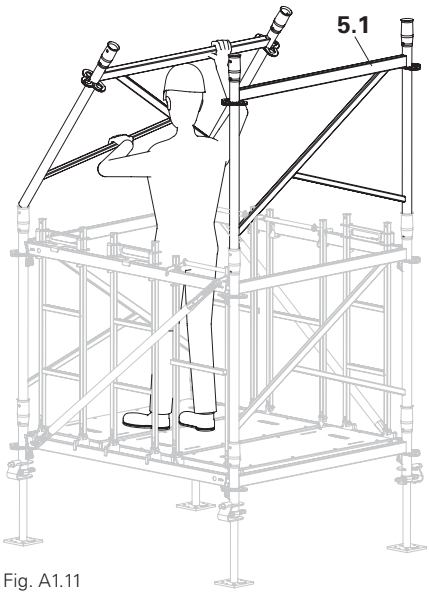

Fig. A1.11

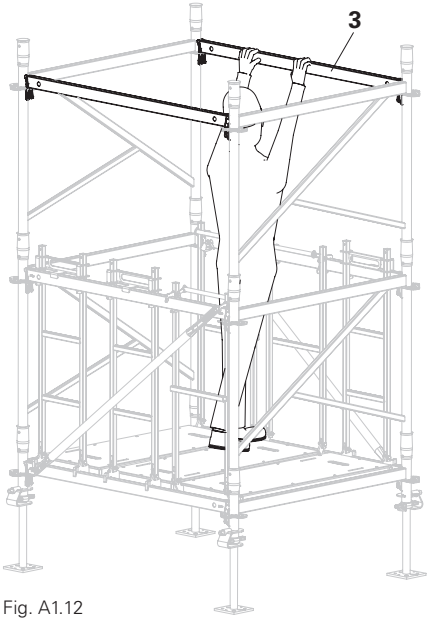

Fig. A1.12

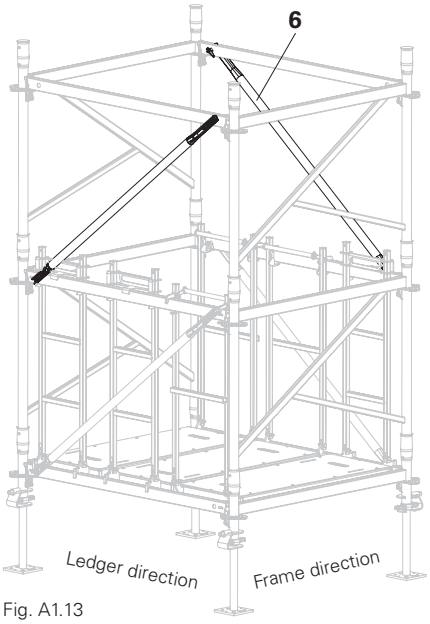

Fig. A1.13

Misapplications

- Always install the Frame MDS K on the frame directly below and not offset by 90°!
  (Fig. A1.14 – only Frame MDS 100 K is shown)
- Climbing on the outer side of the shoring tower is not permitted.

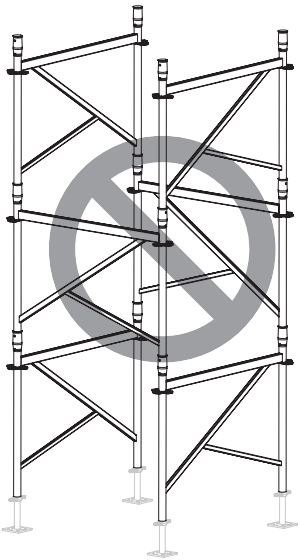

Fig. A1.14

Moving the deck level

- The decks from the lower level are re-installed at the top.
- The yellow side is always higher when the decks are moved. Therefore, begin with the yellow side when moving upwards. (Fig. A1.15)

Assembly

1. Release the yellow lug (8d) and hook it into the top horizontal ledger (3). (Fig. A1.15a)
2. Release the two hooks on the red side opposite and hook them into the top horizontal ledger (3). (Fig. A1.16)
3. Move the other decks by following points 1 +2. (Fig. A1.17)
4. Climb up to the top deck level before moving the final deck.

Accessing the top level by means of
- the rungs on the red side (8l), tread height 50 cm.
- the rungs on the yellow side (8k), tread height 33 cm.

5. Move final deck from above. (Fig. A1.18)
   - Re-position yellow lug from the bottom to the top as detailed in point 1.
   - Re-position hooks of the red side from the bottom to the top as detailed in point 2.

- Is the red tipping bar (8c) folded downwards?
- Is the yellow lug (8e) positioned against the horizontal ledger? (Fig. A1.16)
- Are the claws (8f) on the yellow side resting on the horizontal ledger?

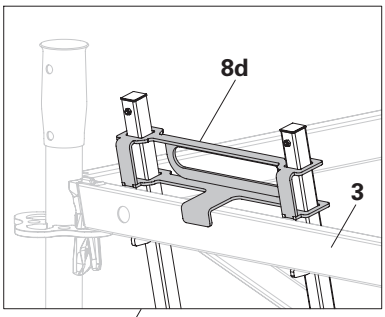

Fig. A1.15a

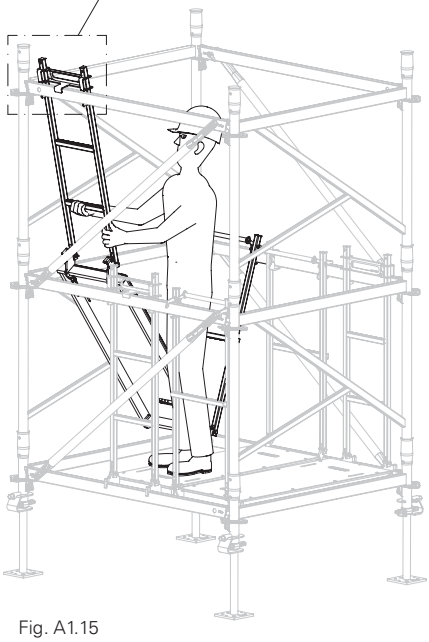

Fig. A1.15

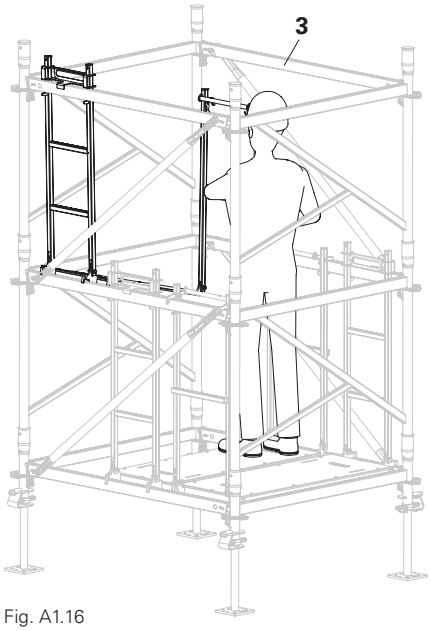

Fig. A1.16

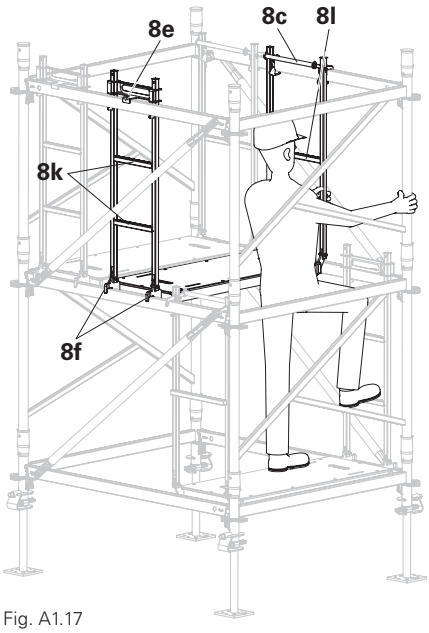

Fig. A1.17

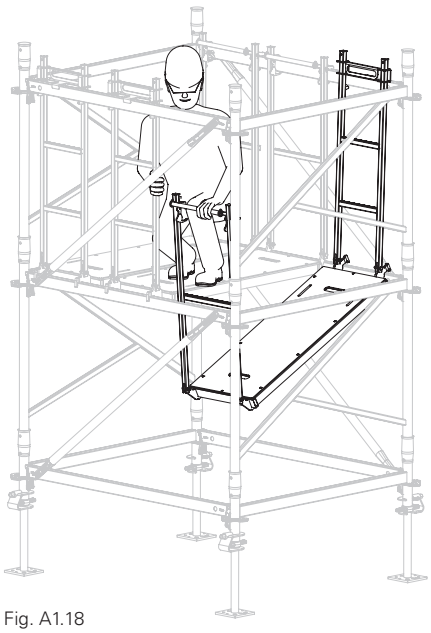

Fig. A1.18

Additional levels

Warning

- Risk of falling during transport of materials.
  ⇒ For higher towers, install one or more additional deck levels.
  ⇒ Determine the need for additional deck levels or temporary support on a project-specific basis according to a separate risk assessment.

- Tipping or horizontal relocation of the scaffolding unit.
  ⇒ Install a temporary support during installation, see Section A5.

3	Horizontal Ledger UH Plus	2x
5.1	Frame MDS 100 K	2x
6	Ledger Brace UBL	2x

The decks from the lower level are re-installed at the top.

Assembly

1. Install additional frame planes as described in Section A1.4. (Fig. A1.19)
2. Move decks to the next highest frame plane as described in Section A1.5. (Fig. 1.20)

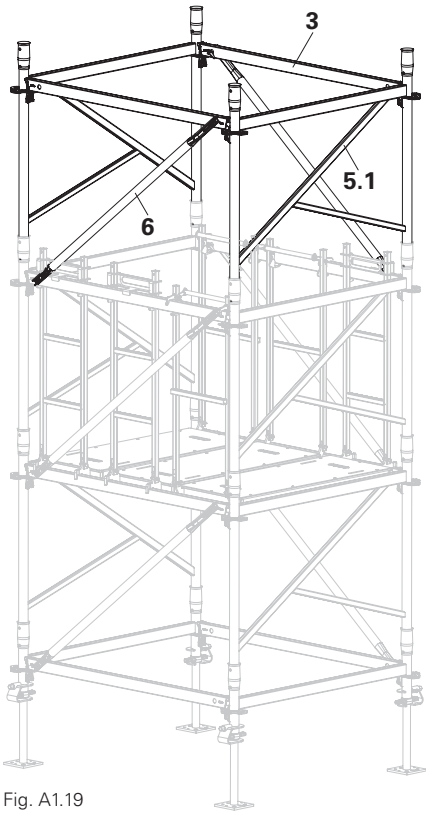

Fig. A1.19

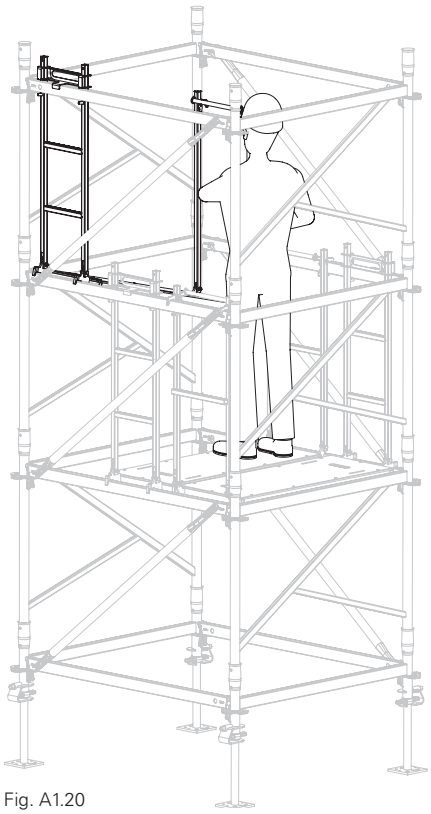

Fig. A1.20

Material transport

Pass the other necessary components upwards, with protection provided by the existing guardrails. (Fig. A1.21)

For higher towers, install one or more additional deck levels.

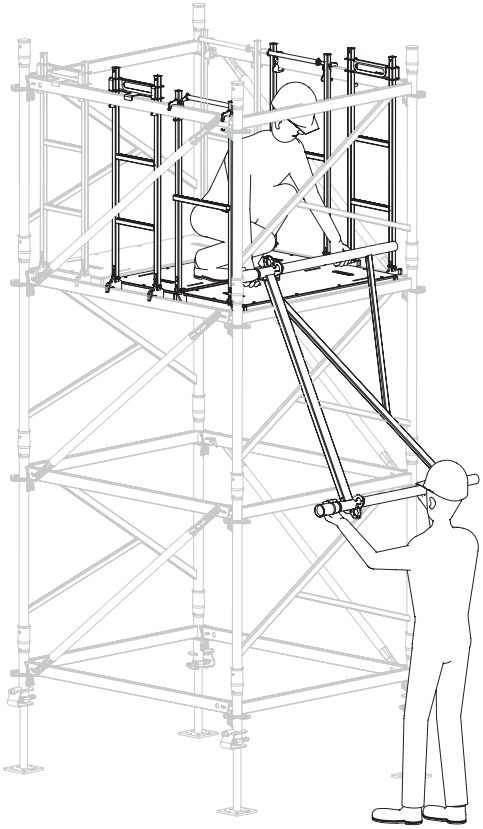

Fig. A1.21

Final level

Head spindle locking is optional and must only be integrated if the shoring tower is moved at a later time.

3	Horizontal Ledger UH Plus	2x
6	Ledger Brace UBL	2x
7	End Frame MDS 50	2x
9.1	Pivoting Head Spindle-2 TR 38/50-70	4x
	alternatively:	
9.2	Crosshead Spindle TR 38-70/50	4x
10	Head Spindle Locking UJH – optional	4x

Preparation
Remove cotter pin (**10e**) and wedge (**10d**) on the spindle locking (**10**).

Assembly
1. Install end frame (7).
2. Install horizontal ledger (3).
3. Hammer all wedges into place.
4. Fit ledger brace (6).
5. Insert one head spindle (9.1 / 9.2) into each of the tubes of the end frame. (Fig. A1.22a + A1.22b)
6. Optional: place the groove of the head spindle locking (10) on the horizontal ledger, in the process hooking in the two claws (10a) into the rosette from below.
   → Retaining plate (10b) is positioned above the quick jack nut (10c) of the head spindle locking.
7. Push the wedge (10d) through slots in the head spindle locking and hammer into place.
8. Insert cotter pin (10e) into the hole of the wedge.
   → Head spindle is now secured against lifting.

(Fig. A1.22)

Have the cotter pins been fitted?

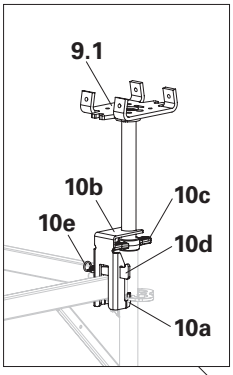

Fig. A1.22a

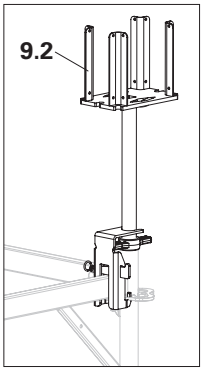

Fig. A1.22b

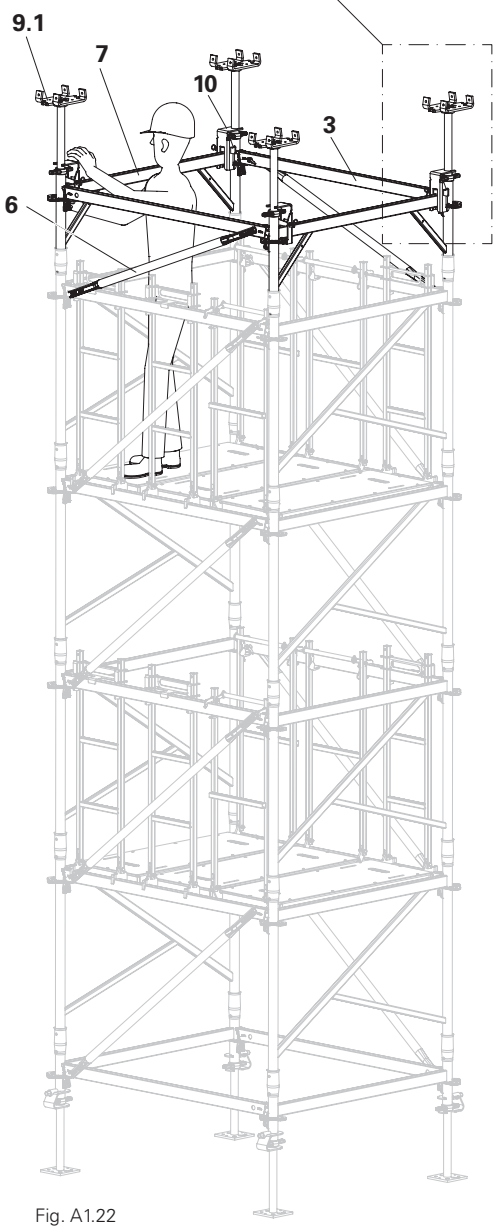

Fig. A1.22

Height adjustment

In order to vertically adjust the Shoring Tower MDS K, combine the Frame MDS 100 K (**5.1**) with the Intermediate Frame MDS 50 (**5.2**).

Install the Intermediate Frame MDS 50 as required in the level below the End Frame MDS 50 (**7**).
(Fig. A1.23 + A1.24 + A1.25)

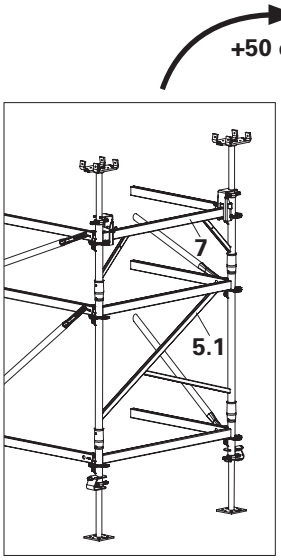

Fig. A1.23

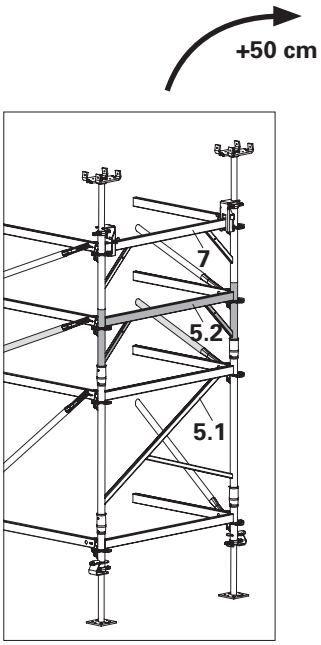

Fig. A1.24

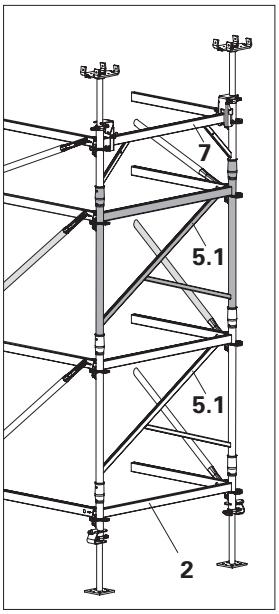

Fig. A1.25

- The final level remains unchanged as described in Section A1.8.
- Continuously adjust the final height with the head spindles.

With a crane

Warning

If scaffolding units should fall during transfer operations, this can result in serious injury or even death.

⇒ Ensure that the scaffolding unit is picked up and set down in such a way that unintentional falling over, falling apart, sliding, falling down or rolling is avoided.

⇒ During moving operations, no persons are allowed to remain under the suspended load, see Section 6 – Storage and Transportation.

- Ground plans 125 x 100 cm and 125 x 150 cm that feature tower heights up to 6.80 m can be moved without additional measures.
  Larger ground plans or higher towers must be connected with tension belts to ensure tensile strength.
- Recommended angle of inclination of the chains: approx. 60° to the horizontal.
- Max. tower weight 600 kg.
- Attach four-sling lifting gear to the standards below the rosettes and horizontal ledgers.

Moving:
Connect the top and bottom frames on both frame sides of the tower in the centre of the frame, e.g. with tension belts!
The load-bearing capacity of the belts used must be at least equal to the tower weight.

- Are the wedges securely in position?
- Have all diagonals been installed?
- Have spindle lockings been fitted?

With high towers, fast and cost-effective work operations are ensured if prefabricated units with heights of approx. 5-6 m are placed one on top of the other with the crane.

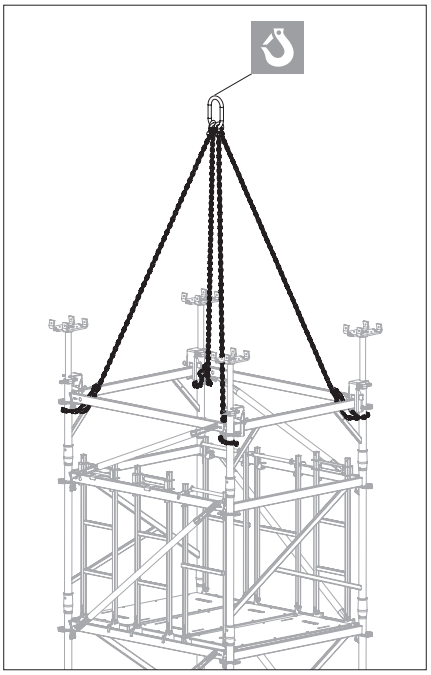

Fig. A2.01a

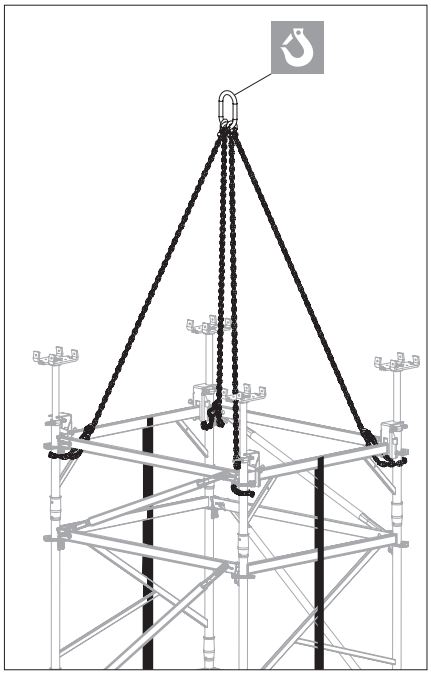

Fig. A2.01b

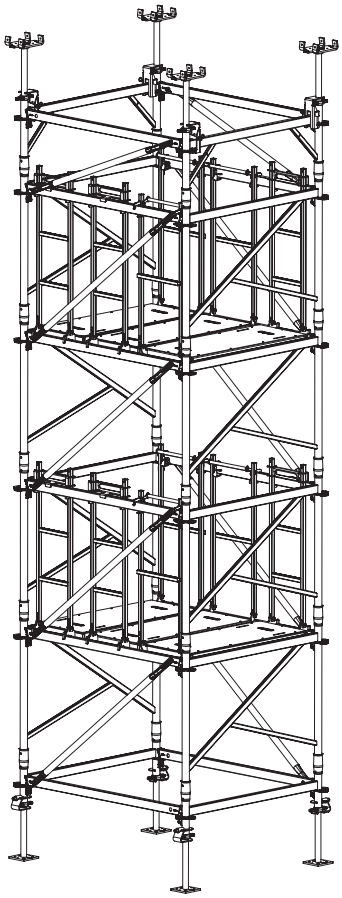

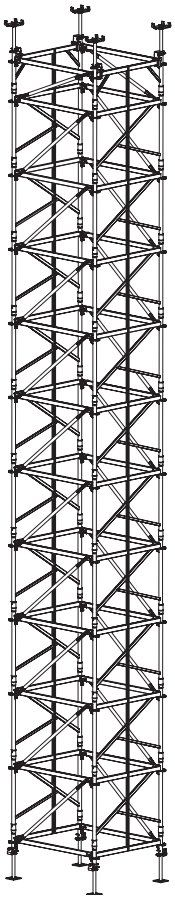

Using the trolley with winch unit

Observe the instructions for use for the trolley with winch unit.

11	Trolley with winch unit	2x
12	Support PERI UP – Trolley	2x

Assembly

1. Fit adapter (12a) onto the trolley with winch unit (11). (Fig. A2.02)
2. Fit telescopic tube (12b) onto the trolley with winch unit (11). (Fig. A2.02)
3. Pick up shoring tower by means of the holding device of the trolley with winch unit. (Fig. A2.03)

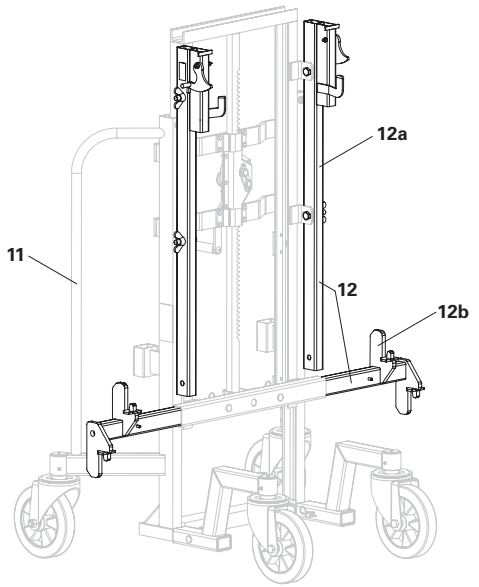

Fig. A2.02

If the clearance between the ground and lower edge of the ledger on the base frame is < 36 cm, the front wheels will not fit under the horizontal ledger. Therefore, temporarily remove the front wheels.

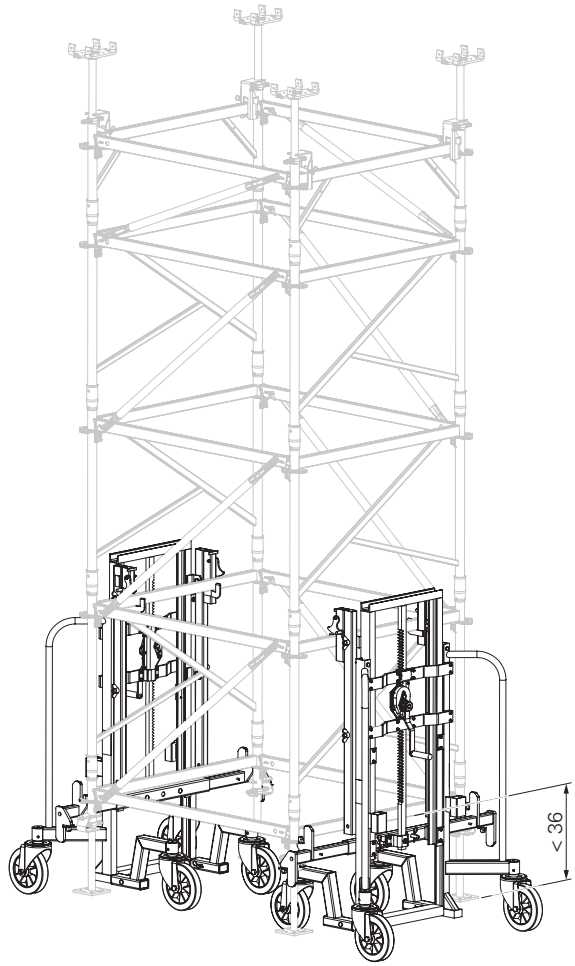

Fig. A2.03

Warning

Falling or shifting scaffolding units can result in serious injuries or even death.

⇒ Secure scaffolding unit with temporary support, see Section A5.

- For safe storage and transportation, place components in PERI pallets, see Section A6.
- The yellow side is always higher when the decks are moved. Therefore, begin with the red side when moving downwards.

Disassembly

1. Dismantling the final level:
   - Optional: release head spindle locking.
   - Remove head spindle from the end frame.
   - Remove ledger braces.
   - Remove horizontal ledgers.
   - Remove end frames.
2. Moving the decks downwards:
   - Firstly, unhook the two hooks of the red side and attach them to the horizontal ledgers positioned below.
   - On the opposite side, detach the yellow lug and fit them back onto the bottom horizontal ledger.
3. Dismantling the next levels down to the first frame plane. Per level:
   - Remove ledger braces.
   - Remove horizontal ledgers.
   - Remove intermediate frames and frames.
   - Move the decks downwards.
4. Removing the deck level:
   - Detach yellow lug and place bar on the decking board.
   - Fold up the decking board.
   - Secure counterholder (8b) with cotter pin (8g).
   - Detach hooks of the red side. (Fig. A3.01a)
5. Dismantling the first frame plane:
   - Remove ledger braces.
   - Remove horizontal ledgers.
   - Remove frames.
6. Dismantling the base unit:
   - Optional: release and remove the spindle locking.
   - Remove horizontal ledgers.
   - Remove base frames.
   - Remove the base spindles.

(Fig. A3.01)

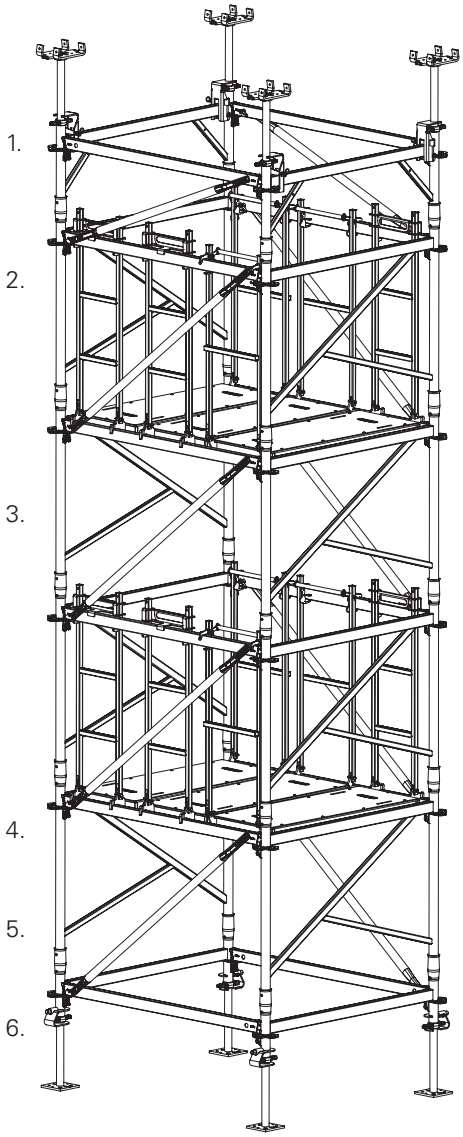

Fig. A3.01

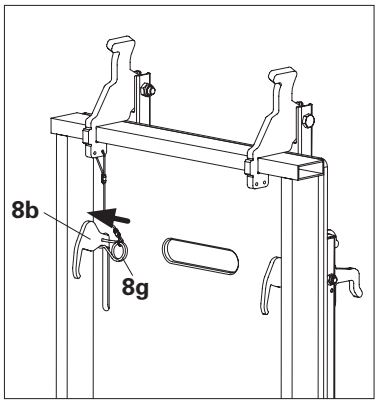

Fig. A3.01a – Deck panel folded up

A4 Shoring tower with additional frames

For transferring concentrated loads, up to 2 additional frames can be connected to an individual tower. The distance between the frames can be freely selected in line with the requirements; max. bay length in ledger direction ≤ 1.50 m. (Fig. A4.01a + A.4.01b)

If required, install additional Decks MDS 125 in the bays of the additional frames.

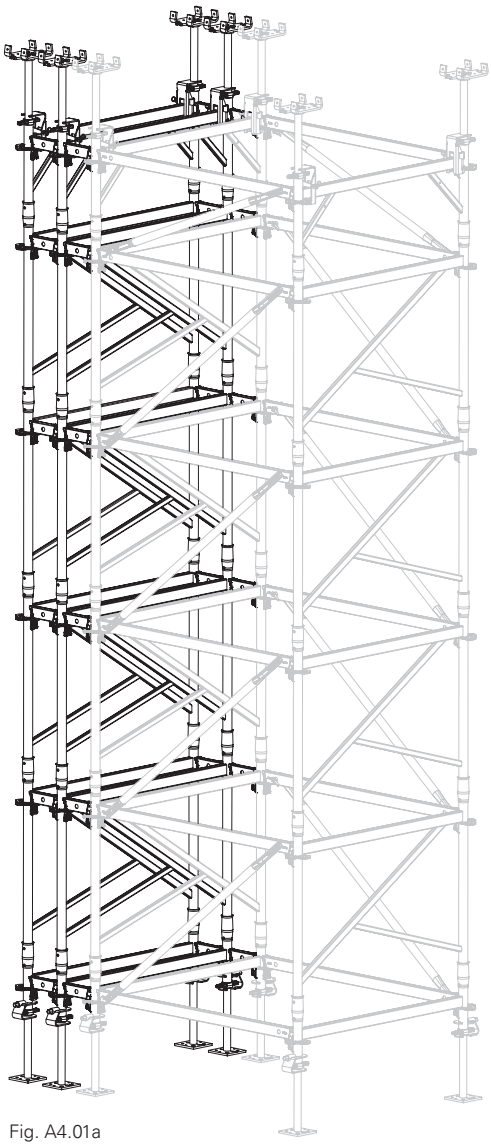

Fig. A4.01a

Ground plans

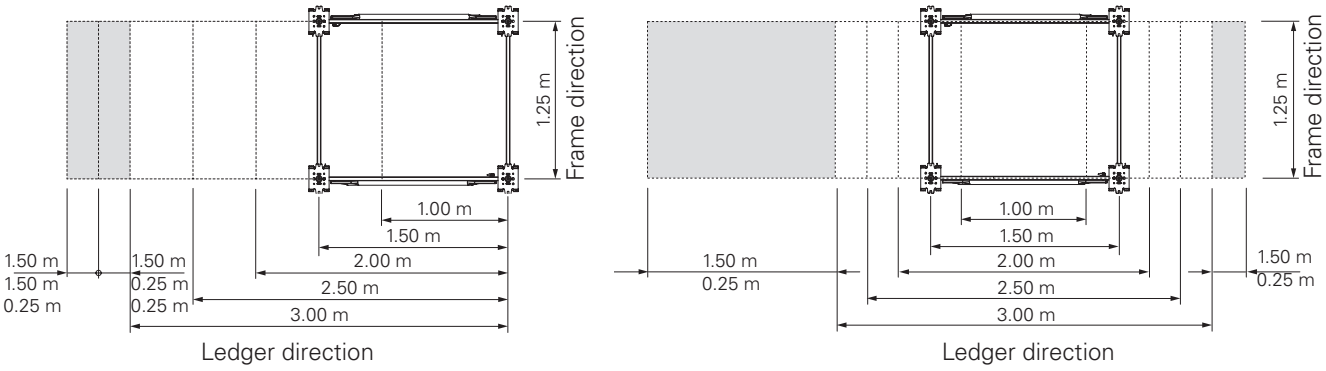

Fig. A4.01b

Supporting individual tower

- To secure against tipping or horizontal movement, temporary support may be necessary during the installation process.
- Fit 3 push-pull props as an assembly aid.
- For high shoring towers, additional holders positioned at a higher level may be required.
- Alternatively, an appropriate holder can be used on existing components with sufficient load-bearing capacity.
- The support used is determined in a project-specific manner.
- Take into consideration the data sheet for Tie Bolt PERI 14/20 x 130 (16).

13	Push-Pull Prop RS	3x
14	Brace Connector HDR-2	3x
15	Base Plate RS	3x
16	Tie Bolt PERI 14/20 x 130	3x

Preparation
Remove cotter pins (**14b**) and bolts (**14a**) from the brace connectors (**14**).

Assembly
1. Secure coupling (14c) of the brace connector (14) to the standard of the shoring tower. (Fig. A5.01a)
2. Insert lug (13a) on the push-pull prop (13) between the lugs of the brace connector.
3. Fix push-pull prop to the brace connector using bolts (14a) and cotter pins (14b). (Fig. A5.01a)
4. Fix the base plate (15) to the ground using tie bolts (16). Inclination angle of the push-pull prop in relation to the ground approx. 60°. (Fig. A5.01b)
5. Secure push-pull prop (13) on the tie plate (15) by means of bolts (15a) and cotter pins (15b). (Fig. A5.01b)

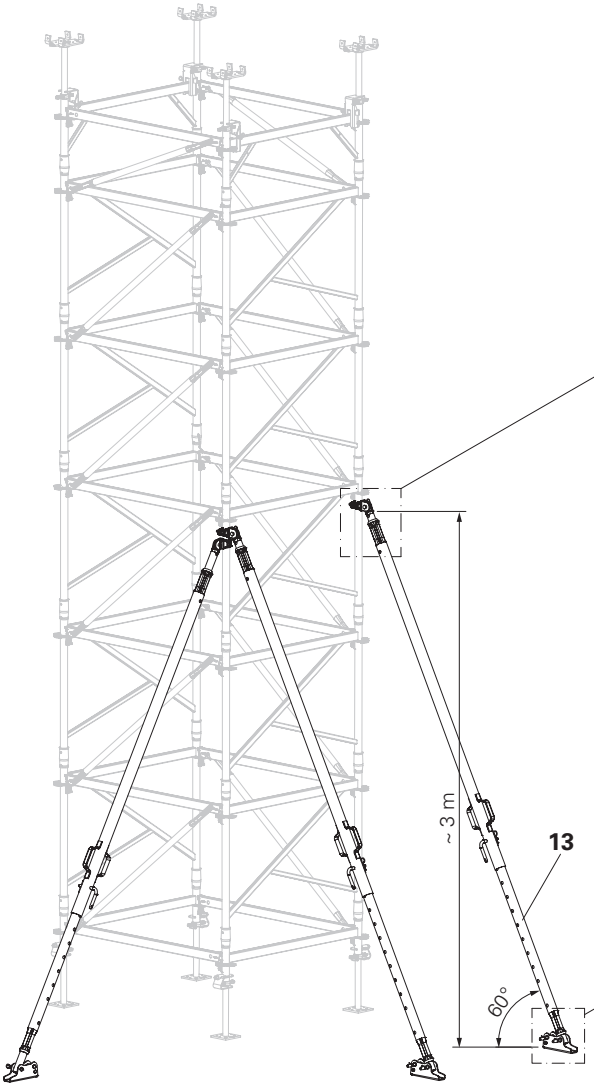

Fig. A5.01

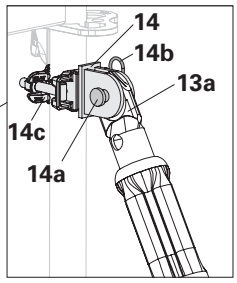

Fig. A5.01a

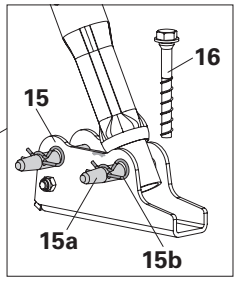

Fig. A5.01b

Bracing sets of shoring towers

Fit push-pull props and horizontal ledgers to provide stability.

3 Horizontal Ledger UH Plus
13 Push-Pull Prop RS
14 Brace Connector HDR-2
15 Base Plate RS
16 Tie Bolt PERI 14/20 x 130

Determine the number of pieces for each project according to the contractor's assembly instructions.

Assembly
- Secure first shoring tower to prevent it from tipping, see Section 5.1.
- Connect additional shoring towers using horizontal ledgers (3) and push-pull props.

(Fig. A5.02)

Alternatively, the shoring towers can be secured to existing structural parts, e.g. walls, in the assembled state to prevent them from falling over or shifting horizontally.

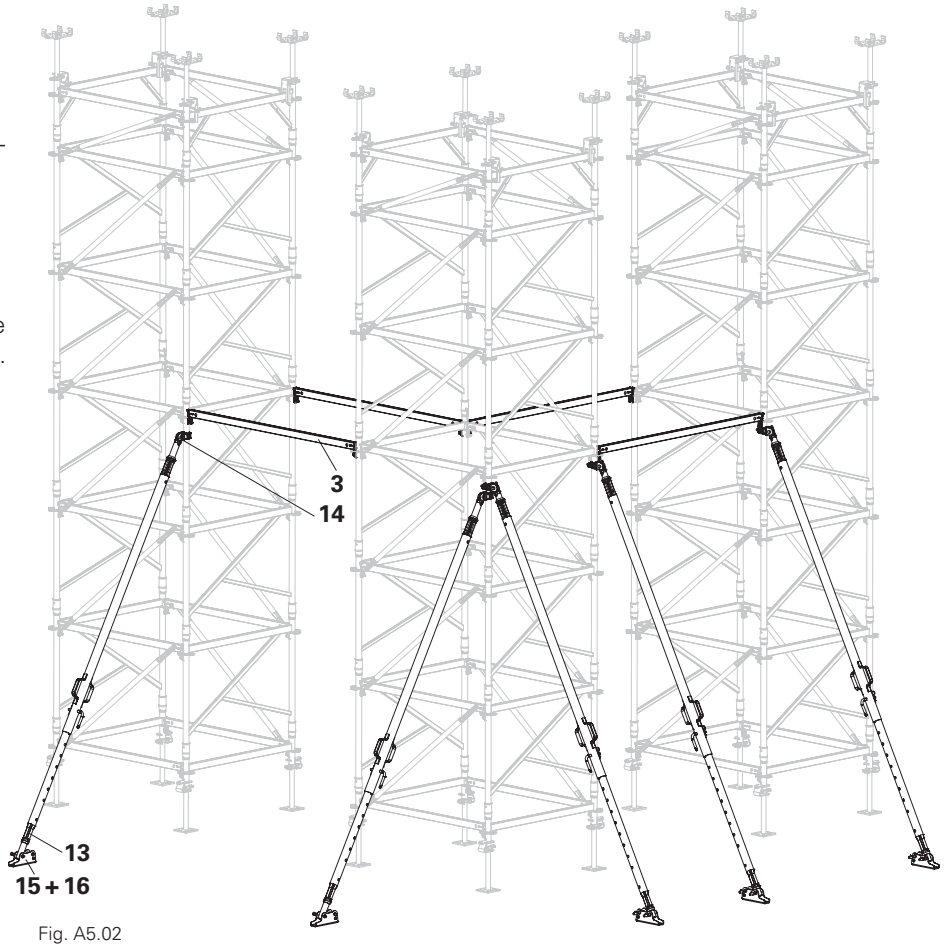

Fig. A5.02

A6 Storage and transportation

PERI pallets and stacking devices are suitable for lifting by crane or forklift. They can also be moved with a pallet lifting trolley.

Warning

If transport units should fall during transfer and transport operations, this can result in serious injury or even death.

⇒ During moving operations, no persons are allowed to remain under the suspended load.

⇒ Do not drop the components.

Caution

Obstacles and tripping hazards on the construction site can cause injuries.

⇒ The access areas on the construction site must be free of obstacles and tripping hazards, and must also be slip-resistant.

- For storage and transportation, the substrate used must have sufficient load-bearing capacity.
- Always use the same components for creating transport units.
- Only ever pick up transport units from the longitudinal side.
- Transport units can be lifted using a forklift.
- Always guide pre-assembled scaffold bays, scaffolding units or scaffolding sections with ropes when moving them by crane.
- Use original PERI storage and transport systems, e.g. crate pallets, pallets or stacking devices.
- Use PERI lifting accessories and slings and only those load-bearing points provided on the component.
- Instructions for Use for PERI pallets and stacking devices must be taken into consideration.

Base Frame MDS
Pallet RP-2 80 x 120
- Insert 3 Base Frames MDS into each other.
  → Bundle.
- Place the bundles (14x) in the pallet, alternately overlapping on one side.
- Secure with steel band.
- Max. 42 Base Frames MDS.

(Fig. A6.01)

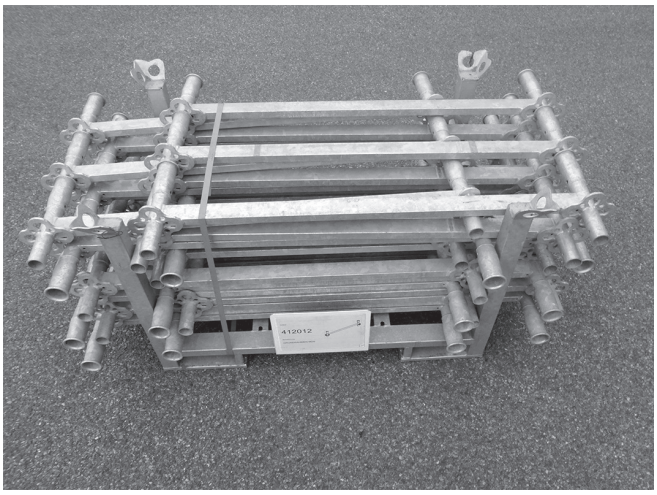

Fig. A6.01

Frame MDS 100 K
Pallet RP-2 80 x 150
- Place the frame in the pallet. The upper and lower sides point alternately to one side.
- Secure with steel band.
- Max. 11 Frames MDS 100 K.

(Fig. A6.02)

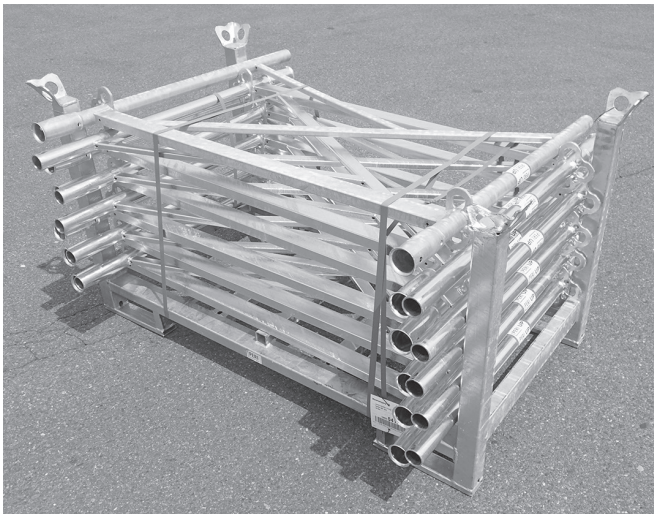

Fig. A6.02

Intermediate Frame MDS 50
Pallet RP-2 80 x 120

- Insert 2 intermediate frames into each other.
  → Bundle.
- Place the bundles (14x) in the pallet, alternately overlapping on one side.
- Secure with steel band.
- Max. 28 Intermediate Frames MDS 50.

(Fig. A6.03)

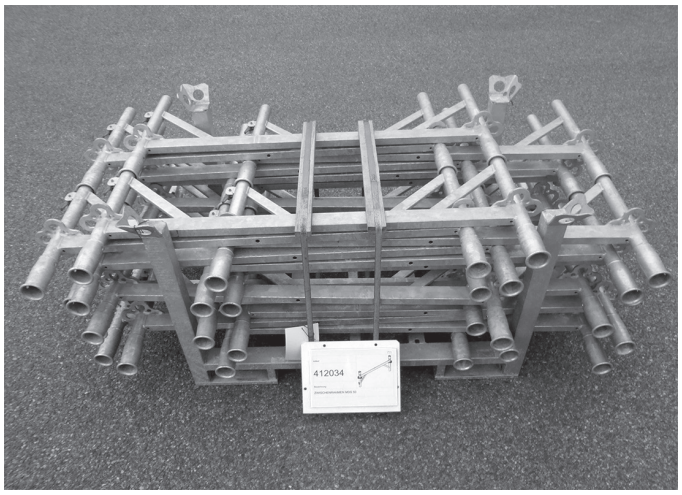

Fig. A6.03

End Frame MDS 50
Pallet RP-2 80 x 120

- Place the end frame (10x) in the pallet, protruding on one side alternately and in opposite directions.
  → Pallet is filled asymmetrically.
- Secure with steel band.
- Max. 20 End Frames MDS 50.

(Fig. A6.04)

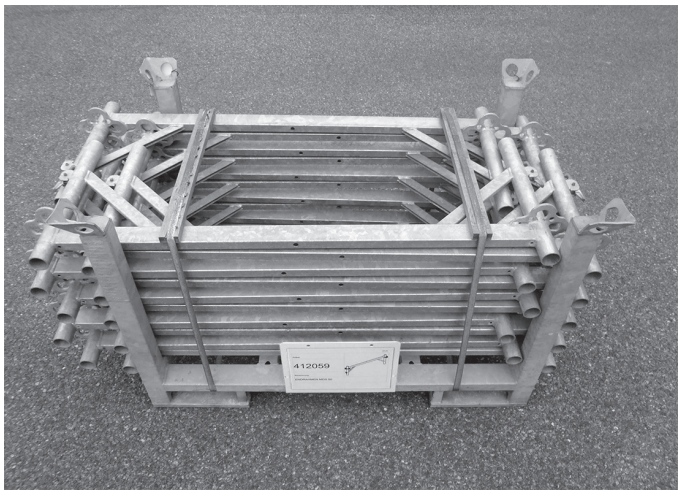

Fig. A6.04

Deck MDS 125
Pallet RP-2 80 x 150

Caution

Decks may slip off when stacking or opening a transport unit, which could result in persons being struck and injured.

⇒ Stack and secure transport units in the correct manner, ensuring that no unintentional change in their position is possible.

– Place 3 Decks MDS 125 next to each other and 5 layers on top of each other. The cams (8 m) must reach into the stacking pockets (8n).
– Secure with steel band.
– Max. 15 Decks MDS 125.

(Fig. A6.05 + A6.06)

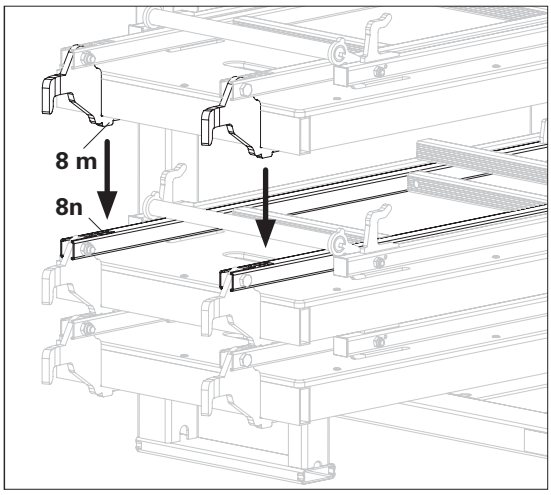

Fig. A6.05

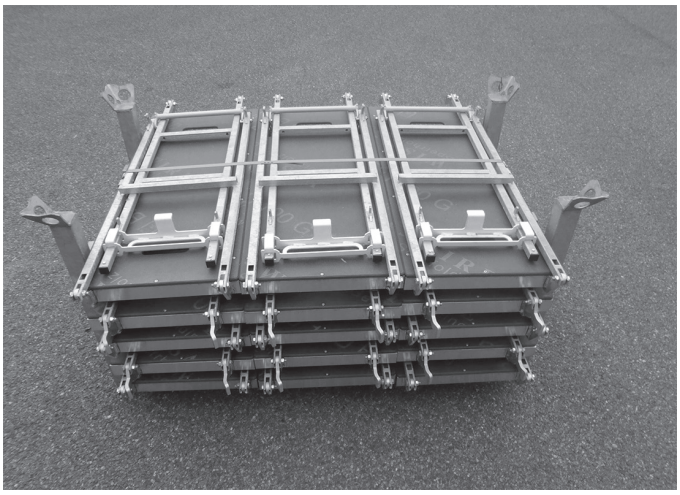

Fig. A6.06

A7 Calculating material quantities

5 cm construction-related minimum spindle extensions at the top and bottom have already been taken into consideration in the height of the tower.
The additional space required for striking in accordance with local conditions (deflections, height of the formwork or load-distributing superstructure) must also be taken into consideration by the contractor! The specified quantities refer to the materials that are statically required.

Article no.	112012	131806	112034	112059	var.	var.	var.
Tower height from ... to ... (m)	Base Frame MDS	Frame MDS 100 K	Intermediate Frame MDS 50	End Frame MDS 50	Horizontal Ledger UH-2 yyy	Ledger Brace UBL-2 yyy/50	Ledger Brace UBL-2 yyy/100
1.34 – 1.89	2	0	2	2	6	4	0
1.84 – 2.39	2	2	0	2	6	2	2
2.34 – 2.89	2	2	2	2	8	4	2
2.84 – 3.39	2	4	0	2	8	2	4
3.34 – 3.89	2	4	2	2	10	4	4
3.84 – 4.39	2	6	0	2	10	2	6
4.34 – 4.89	2	6	2	2	12	4	6
4.84 – 5.39	2	8	0	2	12	2	8
5.34 – 5.89	2	8	2	2	14	4	8
5.84 – 6.39	2	10	0	2	14	2	10
6.34 – 6.89	2	10	2	2	16	4	10
6.84 – 7.39	2	12	0	2	16	2	12
7.34 – 7.89	2	12	2	2	18	4	12
7.84 – 8.39	2	14	0	2	18	2	14
8.34 – 8.89	2	14	2	2	20	4	14
8.84 – 9.39	2	16	0	2	20	2	16
9.34 – 9.89	2	16	2	2	22	4	16
9.84 – 10.39	2	18	0	2	22	2	18
10.34 – 10.89	2	18	2	2	24	4	18
10.84 – 11.39	2	20	0	2	24	2	20
11.34 – 11.89	2	20	2	2	26	4	20
11.84 – 12.39	2	22	0	2	26	2	22
12.34 – 12.89	2	22	2	2	28	4	22
12.84 – 13.39	2	24	0	2	28	2	24
13.34 – 13.89	2	24	2	2	30	4	24
13.84 – 14.39	2	26	0	2	30	2	26
14.34 – 14.89	2	26	2	2	32	4	26
14.84 – 15.39	2	28	0	2	32	2	28
15.34 – 15.89	2	28	2	2	34	4	28
15.84 – 16.39	2	30	0	2	34	2	30
16.34 – 16.89	2	30	2	2	36	4	30
16.84 – 17.39	2	32	0	2	36	2	32
17.34 – 17.89	2	32	2	2	38	4	32
17.84 – 18.39	2	34	0	2	38	2	34
18.34 – 18.89	2	34	2	2	40	4	34
18.84 – 19.39	2	36	0	2	40	2	36
19.34 – 19.89	2	36	2	2	42	4	36
19.84 – 20.39	2	38	0	2	42	2	38
20.34 – 20.89	2	38	2	2	44	4	38
20.84 – 21.39	2	40	0	2	44	2	40

A7 Calculating material quantities

Standard components for all tower heights:					
4 pcs	019780	Base Spindle TR 38-70/50	or	100411	Base Spindle UJB 38-50/30
4 pcs	019950	Crosshead Spindle TR 38-70/50	or	116081	Pivoting Head Spindle-2 TR 38-70/50

Specific components for bay length 100 cm:		
114632	Horizontal Ledger UH 100 Plus	
132773	Ledger Brace UBL-2 100/100	
115156	Ledger Brace UBL 100/50	
125631	Deck MDS 125	2 pieces / level

Specific components for bay length 150 cm:		
114641	Horizontal Ledger UH 150 Plus	
100055	Ledger Brace UBL 150/100	
107867	Ledger Brace UBL 150/50	
125631	Deck MDS 125	3 pieces / level

Specific components for bay length 200 cm:		
114645	Horizontal Ledger UH 200 Plus	
100059	Ledger Brace UBL 200/100	
104391	Ledger Brace UBL 200/50	
125631	Deck MDS 125	4 pieces / level

Specific components for bay length 250 cm:		
114648	Horizontal Ledger UH 250 Plus	
100063	Ledger Brace UBL 250/100	
102862	Ledger Brace UBL 200/150	
125631	Deck MDS 125	5 pieces / level

Specific components for bay length 300 cm:		
114651	Horizontal Ledger UH 300 Plus	
100067	Ledger Brace UBL 300/100	
104762	Ledger Brace UBL 300/50	
125631	Deck MDS 125	6 pieces / level

Additional components for crane offset:		
4 pcs	100863	Spindle Locking UJS
4 pcs	109563	Head Spindle Locking UJH

Ground plan

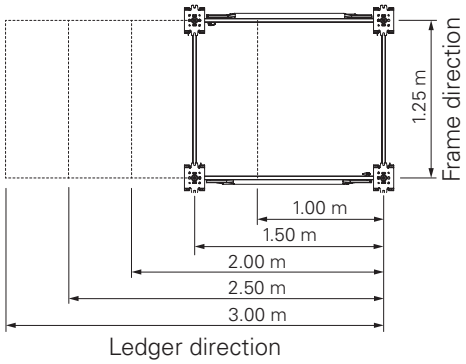

B1 Shoring tower – restrained at the top

Operating conditions

Restrained at the top
- **Without wind q = 0.0 kN/m²**
- **With wind q = 0.5 kN/m²**

Spindle type featured on the head

"KK" = Crosshead Spindle TR 38-70/50

"GK" = Pivoting Head Spindle-2 TR 38-70/50

Spindle type featured on the base

"TR" = Base Spindle TR 38-70/50

"UJB" = Base Spindle UJB 38-50/30

Calculation basis
DIN EN 12812 Shoring.

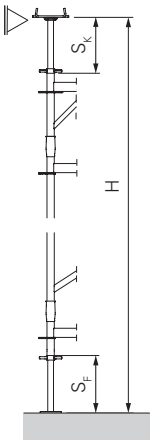

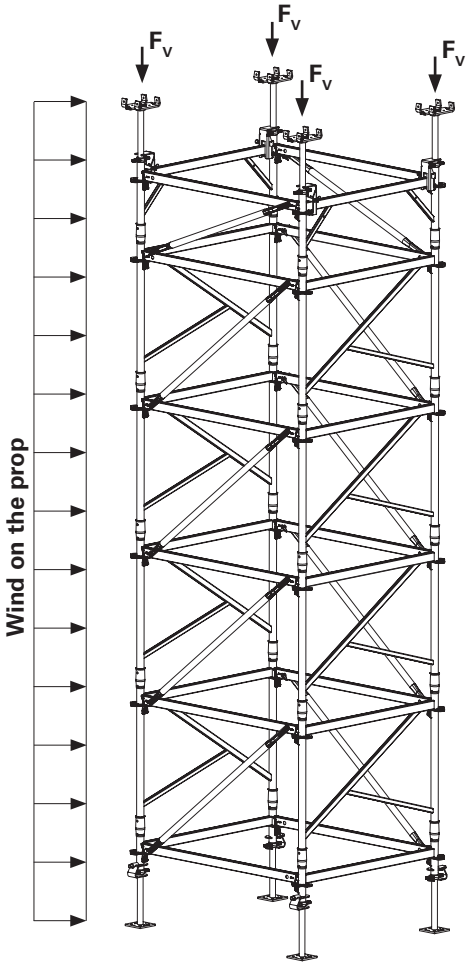

Ground plan

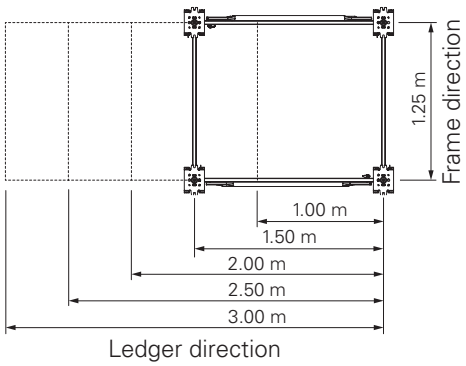

Perm. leg load F_V

Without wind q = 0.0 kN/m²

S_K ≤ 30 cm, S_F ≤ 35 cm "TR"

Height H [m]	Ground plan [m]				
	1.25 x 1.00	1.25 x 1.50	1.25 x 2.00	1.25 x 2.50	1.25 x 3.00
	Perm. F_V [kN]				
	KK/GK	KK/GK	KK/GK	KK/GK	KK/GK
1.83 - 6.39	47.8	49.0	50.2	47.6	45.1
6.33 - 6.89	47.7	48.9	50.1	47.5	44.9
6.83 - 7.39	47.6	48.8	49.9	47.4	44.8
7.33 - 7.89	47.6	48.7	49.8	47.2	44.6
7.83 - 8.39	47.5	48.6	49.7	47.1	44.5
8.33 - 8.89	47.4	48.5	49.5	47.0	44.4
8.83 - 9.39	47.4	48.4	49.4	46.8	44.2
9.33 - 9.89	47.3	48.3	49.3	46.7	44.1
9.83 - 10.39	47.2	48.2	49.1	46.5	43.9
10.33 - 10.89	47.2	48.1	49.0	46.4	43.8
10.89 - 11.39	47.1	48.0	48.9	46.3	43.7
11.33 - 11.89	47.0	47.9	48.8	46.1	43.5
11.83 - 12.39	47.0	47.8	48.6	46.0	43.4
12.33 - 12.89	46.9	47.7	48.5	45.9	43.3
12.83 - 13.39	46.9	47.7	48.4	45.8	43.2
13.33 - 13.89	46.9	47.6	48.3	45.7	43.2
13.83 - 14.39	46.8	47.5	48.3	45.7	43.1
14.33 - 14.89	46.8	47.5	48.2	45.6	43.0
14.83 - 15.39	46.7	47.4	48.1	45.5	42.9
15.33 - 15.89	46.7	47.3	48.0	45.4	42.8
15.83 - 16.39	46.7	47.3	47.9	45.3	42.8
16.33 - 16.89	46.6	47.2	47.8	45.2	42.7
16.83 - 17.39	46.6	47.1	47.7	45.2	42.6
17.33 - 17.89	46.5	47.1	47.6	45.1	42.5
17.83 - 18.39	46.5	47.0	47.5	45.0	42.4
18.33 - 18.89	46.5	47.0	47.5	44.9	42.4
18.83 - 19.39	46.4	46.9	47.4	44.9	42.4
19.33 - 19.89	46.4	46.9	47.4	44.9	42.3
19.83 - 20.39	46.4	46.9	47.3	44.8	42.3
20.33 - 20.89	46.4	46.8	47.3	44.8	42.2
20.83 - 21.39	46.3	46.8	47.2	44.7	42.2

S_K ≤ 30 cm, S_F ≤ 35 cm "UJB"

Height H [m]	Ground plan [m]				
	1.25 x 1.00	1.25 x 1.50	1.25 x 2.00	1.25 x 2.50	1.25 x 3.00
	Perm. F_V [kN]				
	KK/GK	KK/GK	KK/GK	KK/GK	KK/GK
1.83 - 6.39	45.5	45.7	45.9	45.0	44.1
6.33 - 6.89	45.4	45.6	45.8	44.9	44.1
6.83 - 7.39	45.2	45.4	45.6	44.8	44.0
7.33 - 7.89	45.1	45.3	45.5	44.7	44.0
7.83 - 8.39	45.0	45.2	45.4	44.7	43.9
8.33 - 8.89	44.8	45.0	45.3	44.6	43.9
8.83 - 9.39	44.7	44.9	45.2	44.5	43.8
9.33 - 9.89	44.5	44.8	45.0	44.4	43.8
9.83 - 10.39	44.4	44.7	44.9	44.3	43.7
10.33 - 10.89	44.3	44.5	44.8	44.2	43.7
10.89 - 11.39	44.1	44.4	44.7	44.1	43.6
11.33 - 11.89	44.0	44.3	44.5	44.1	43.6
11.83 - 12.39	43.9	44.1	44.4	44.0	43.5
12.33 - 12.89	43.8	44.0	44.3	43.9	43.5
12.83 - 13.39	43.7	44.0	44.2	43.8	43.4
13.33 - 13.89	43.6	43.9	44.1	43.7	43.3
13.83 - 14.39	43.5	43.8	44.0	43.6	43.2
14.33 - 14.89	43.4	43.7	44.0	43.5	43.1
14.83 - 15.39	43.3	43.6	43.9	43.4	43.0
15.33 - 15.89	43.2	43.5	43.8	43.3	42.9
15.83 - 16.39	43.1	43.4	43.7	43.2	42.8
16.33 - 16.89	43.1	43.3	43.6	43.2	42.7
16.83 - 17.39	43.0	43.2	43.5	43.1	42.6
17.33 - 17.89	42.9	43.1	43.4	43.0	42.5
17.83 - 18.39	42.8	43.0	43.3	42.9	42.4
18.33 - 18.89	42.7	43.0	43.2	42.8	42.4
18.83 - 19.39	42.6	42.9	43.1	42.7	42.3
19.33 - 19.89	42.6	42.8	43.1	42.6	42.2
19.83 - 20.39	42.5	42.7	43.0	42.6	42.2
20.33 - 20.89	42.4	42.7	42.9	42.5	42.1
20.83 - 21.39	42.3	42.6	42.8	42.4	42.0

B1 Shoring tower – restrained at the top

With wind q = 0.5 kN/m²

S_K ≤ 30 cm, S_F ≤ 35 cm "TR"

Height H [m]	Ground plan [m]				
	1.25 x 1.00	1.25 x 1.50	1.25 x 2.00	1.25 x 2.50	1.25 x 3.00
	Perm. F_V [kN]				
	KK/GK	KK/GK	KK/GK	KK/GK	KK/GK
1.83 - 6.39	45.4	46.4	47.4	44.7	42.0
6.33 - 6.89	45.0	46.0	46.9	44.3	41.6
6.83 - 7.39	44.7	45.5	46.4	43.8	41.2
7.33 - 7.89	44.3	45.1	45.9	43.4	40.8
7.83 - 8.39	44.0	44.7	45.4	42.9	40.4
8.33 - 8.89	43.7	44.3	44.9	42.4	40.0
8.83 - 9.39	43.3	43.9	44.4	42.0	39.6
9.33 - 9.89	43.0	43.4	43.9	41.5	39.2
9.83 - 10.39	42.7	43.0	43.4	41.1	38.8
10.33 - 10.89	42.3	42.6	42.9	40.6	38.4
10.89 - 11.39	42.0	42.2	42.4	40.2	38.0
11.33 - 11.89	41.6	41.7	41.8	39.7	37.6
11.83 - 12.39	41.3	41.3	41.3	39.3	37.2
12.33 - 12.89	41.1	40.9	40.8	38.7	36.6
12.83 - 13.39	40.8	40.6	40.3	38.1	35.9
13.33 - 13.89	40.6	40.2	39.7	37.5	35.3
13.83 - 14.39	40.4	39.8	39.2	36.9	34.7
14.33 - 14.89	40.2	39.4	38.7	36.4	34.0
14.83 - 15.39	39.9	39.0	38.2	35.8	33.4
15.33 - 15.89	39.7	38.7	37.6	35.2	32.8
15.83 - 16.39	39.5	38.3	37.1	34.6	32.1
16.33 - 16.89	39.2	37.9	36.6	34.0	31.5
16.83 - 17.39	39.0	37.5	36.0	33.4	30.9
17.33 - 17.89	38.8	37.1	35.5	32.9	30.2
17.83 - 18.39	38.5	36.8	35.0	32.3	29.6
18.33 - 18.89	38.3	36.4	34.5	31.7	28.9
18.83 - 19.39	38.0	36.0	34.0	31.1	28.3
19.33 - 19.89	37.8	35.6	33.5	30.6	27.7
19.83 - 20.39	37.5	35.3	33.0	30.0	27.0
20.33 - 20.89	37.3	34.9	32.5	29.4	26.4
20.83 - 21.39	37.0	34.5	32.0	28.9	25.7

S_K ≤ 30 cm, S_F ≤ 35 cm "UJB"

Height H [m]	Ground plan [m]				
	1.25 x 1.00	1.25 x 1.50	1.25 x 2.00	1.25 x 2.50	1.25 x 3.00
	Perm. F_V [kN]				
	KK/GK	KK/GK	KK/GK	KK/GK	KK/GK
1.83 - 6.39	41.7	41.6	41.5	40.7	39.9
6.33 - 6.89	41.2	41.1	41.0	40.1	39.3
6.83 - 7.39	40.8	40.6	40.4	39.5	38.6
7.33 - 7.89	40.3	40.1	39.9	38.9	38.0
7.83 - 8.39	39.8	39.6	39.4	38.4	37.3
8.33 - 8.89	39.4	39.1	38.9	37.8	36.6
8.83 - 9.39	38.9	38.6	38.4	37.2	36.0
9.33 - 9.89	38.4	38.1	37.8	36.6	35.3
9.83 - 10.39	37.9	37.6	37.3	36.0	34.7
10.33 - 10.89	37.5	37.1	36.8	35.4	34.0
10.89 - 11.39	37.0	36.6	36.3	34.8	33.4
11.33 - 11.89	36.5	36.1	35.8	34.2	32.7
11.83 - 12.39	36.0	35.6	35.2	33.6	32.0
12.33 - 12.89	35.6	35.2	34.7	32.9	31.2
12.83 - 13.39	35.2	34.7	34.2	32.3	30.3
13.33 - 13.89	34.8	34.2	33.7	31.6	29.4
13.83 - 14.39	34.3	33.7	33.2	30.9	28.6
14.33 - 14.89	33.9	33.3	32.6	30.2	27.7
14.83 - 15.39	33.5	32.8	32.1	29.5	26.9
15.33 - 15.89	33.1	32.3	31.6	28.8	26.0
15.83 - 16.39	32.6	31.9	31.1	28.1	25.1
16.33 - 16.89	32.2	31.4	30.5	27.4	24.3
16.83 - 17.39	31.8	30.9	30.0	26.7	23.4
17.33 - 17.89	31.4	30.4	29.5	26.0	22.5
17.83 - 18.39	30.9	30.0	29.0	25.3	21.7
18.33 - 18.89	30.6	29.5	28.4	24.4	20.4
18.83 - 19.39	30.2	29.0	27.7	23.4	19.2
19.33 - 19.89	29.9	28.5	27.1	22.5	17.9
19.83 - 20.39	29.5	28.0	26.5	21.6	16.6
20.33 - 20.89	29.2	27.5	25.9	20.6	15.4
20.83 - 21.39	28.9	27.1	25.3	19.7	14.1

B2 Shoring tower – free-standing

Operating conditions

Free-standing
- **Height** **H = 6.39 m**
- **With wind** **q ≤ 0.5 kN/m²**
- **Friction factor** **μ = 0.3**

Spindle type featured on the head

"KK" = Crosshead Spindle TR 38-70/50

"GK" = Pivoting Head Spindle-2 TR 38-70/50

Spindle type featured on the base

"TR" = Base Spindle TR 38-70/50

"UJB" = Base Spindle UJB 38-50/30

Calculation basis
DIN EN 12812 Shoring.

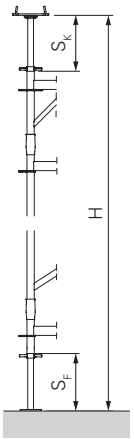

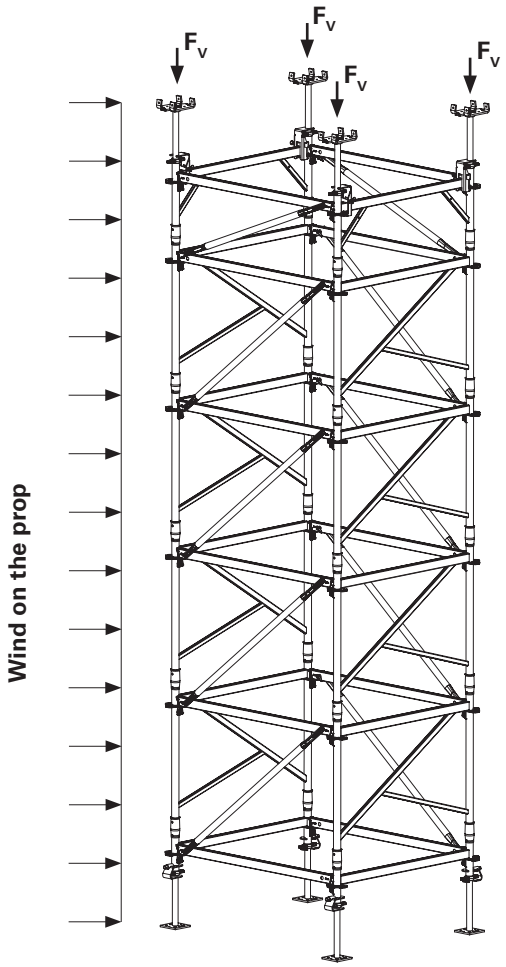

Ground plan

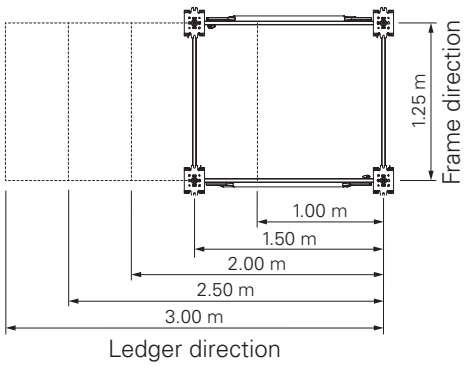

Perm. leg load F_V

With variable horizontal load F_H

S_K ≤ 30 cm, S_F ≤ 35 cm "TR"

F_H [kN]	Ground plan [m] Ground plan [m]V									
	1.25 x 1.00		1.25 x 1.50		1.25 x 2.00		1.25 x 2.50		1.25 x 3.00	
	Perm. F_V [kN]									
	KK/GK	min.*	KK/GK	min.*	KK/GK	min.*	KK/GK	min.*	KK/GK	min.*
0.0	47.3	3.3	47.7	2.7	48.1	2.3	45.3	2.9	42.6	3.5
0.2	45.6	5.1	46.1	4.1	45.8	3.7	43.6	4.3	40.7	4.9
0.4	43.9	6.9	44.5	5.7	42.6	5.2	40.3	5.8	38.1	6.4
0.6	42.0	9.3	41.7	7.5	39.5	6.8	37.5	7.5	35.5	8.2
0.8	40.0	11.6	38.5	9.3	36.3	8.3	34.7	9.2	32.9	10.0
1.0	37.2	14.3	35.3	11.3	33.2	9.9	30.9	12.1	28.7	14.2
1.2	34.3	20.1	32.5	15.1	30.7	13.3	27.5	17.2	24.4	21.0

*** min.** = Minimum load against sliding.
Minimum load is to be calculated with a partial safety factor of $y_F = 0.9$.

B3 Shoring tower with additional frames – restrained at the top

Operating conditions

Ground plan with up to 2 additional frames – restrained at the top
- **Without wind q = 0.0 kN/m²**
- **With wind q = 0.5 kN/m²**

Spindle type featured on the head

"KK" = Crosshead Spindle TR 38-70/50

"GK" = Pivoting Head Spindle-2 TR 38-70/50

Spindle type featured on the base

"TR" = Base Spindle TR 38-70/50

"UJB" = Base Spindle UJB 38-50/30

The values shown in the tables apply to each standard, up to max. 2 additional frames (VSS) with distance of 0.25 m to 1.50 m in the ledger direction in each case.

Calculation basis
DIN EN 12812 Shoring.

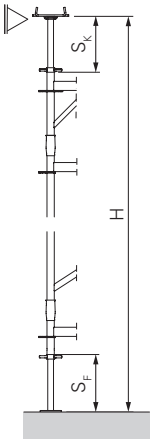

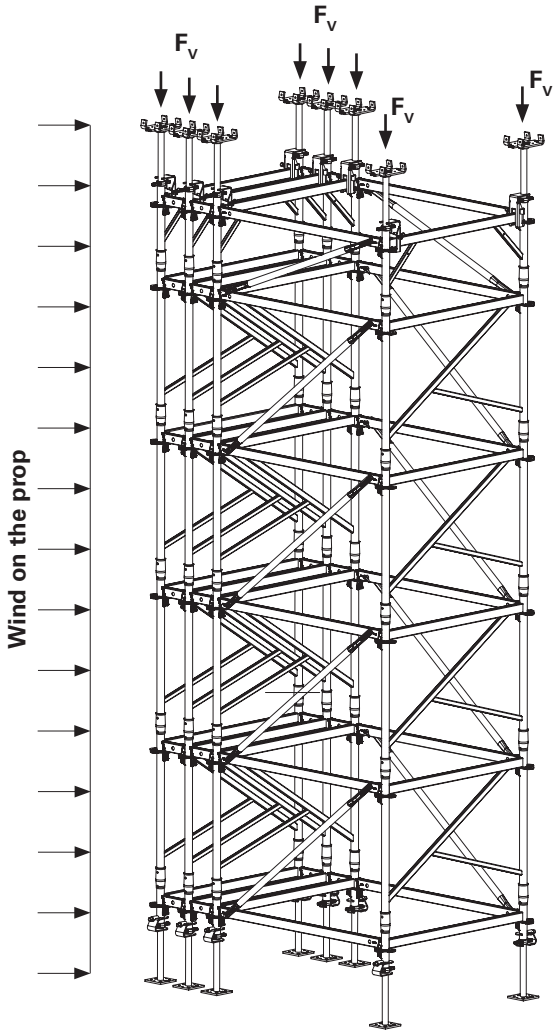

Ground plans

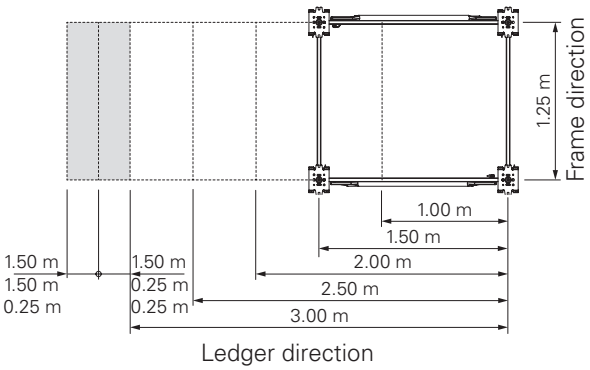

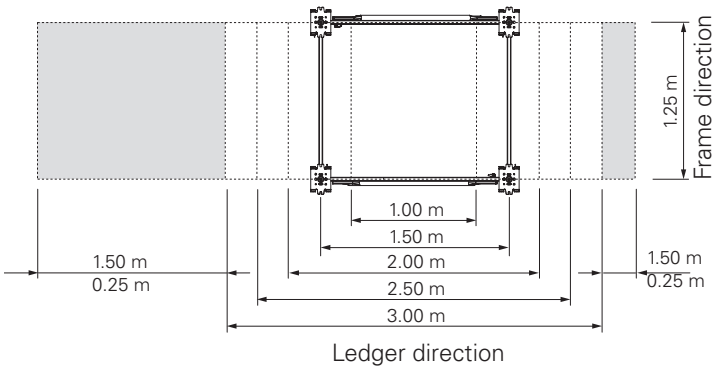

B3 Shoring tower with additional frames – restrained at the top

Perm. leg load F_V

Without wind / q = 0.0 kN/m² // KK / GK // perm. F_V (kN)

S_K ≤ 30 cm, S_F ≤ 35 cm "TR"

	Ground plan [m]				
	1.25 x 1.00	1.25 x 1.50	1.25 x 2.00	1.25 x 2.50	1.25 x 3.00
	+ VSS up to max. 2 x 1.50				
Height H [m]	Perm. F_V [kN]				
	KK/GK	KK/GK	KK/GK	KK/GK	KK/GK
up to 6.39	46.8	47.6	48.4	47.3	46.2
6.40 - 7.39	46.7	47.5	48.2	47.1	46.0
7.40 - 8.39	46.7	47.3	48.0	46.9	45.7
8.40 - 9.39	46.6	47.2	47.8	46.6	45.5
9.40 - 10.39	46.5	47.0	47.6	46.4	45.3
10.40 - 11.39	46.4	46.9	47.3	46.2	45.1
11.40 - 12.39	46.4	46.7	47.1	46.0	44.8

S_K ≤ 30 cm, S_F ≤ 35 cm "UJB"

	Ground plan [m]				
	1.25 x 1.00	1.25 x 1.50	1.25 x 2.00	1.25 x 2.50	1.25 x 3.00
	+ VSS up to max. 2 x 1.50				
Height H [m]	Perm. F_V [kN]				
	KK/GK	KK/GK	KK/GK	KK/GK	KK/GK
up to 6.39	41.6	41.7	41.8	41.8	41.8
6.40 - 7.39	41.5	41.6	41.7	41.7	41.7
7.40 - 8.39	41.3	41.5	41.7	41.7	41.6
8.40 - 9.39	41.2	41.5	41.7	41.6	41.5
9.40 - 10.39	41.1	41.4	41.7	41.5	41.4
10.40 - 11.39	41.0	41.3	41.6	41.4	41.3
11.40 - 12.39	40.8	41.2	41.6	41.4	41.1

With wind / q = 0.5 kN/m² // KK / GK // perm. F_V (kN)

S_K ≤ 30 cm, S_F ≤ 35 cm "TR"

	Ground plan [m]		
	1.25 x 1.00	1.25 x 1.50	1.25 x 2.00
	+ VSS up to max. 2 x 0.25		
Height H [m]	Perm. F_V [kN]		
	KK/GK	KK/GK	KK/GK
up to 6.39	43.5	44.4	45.2
6.40 - 7.39	42.8	43.6	44.4
7.40 - 8.39	42.2	42.8	43.5
8.40 - 9.39	41.5	42.1	42.7
9.40 - 10.39	40.8	41.3	41.8
10.40 - 11.39	40.2	40.5	41.0
11.40 - 12.39	39.5	39.7	40.1

S_K ≤ 30 cm, S_F ≤ 35 cm "TR"

	Ground plan [m]		
	1.25 x 1.00	1.25 x 1.50	1.25 x 2.00
	+ VSS up to 150 + 25 or 150 + 150)		
Height H [m]	Perm. F_V [kN]		
	KK/GK	KK/GK	KK/GK
up to 6.39	43.5	44.4	45.2
6.40 - 7.39	42.9	43.6	44.3
7.40 - 8.39	42.2	42.8	43.5
8.40 - 9.39	41.5	42.1	42.6
9.40 - 10.39	40.8	41.3	41.4
10.40 - 11.39	40.2	40.5	39.7
11.40 - 12.39	39.5	39.0	37.9

Article no.	Weight kg	
125631	14.800	**Deck MDS 125**

Technical data
Permissible load 2.0 kN/m²

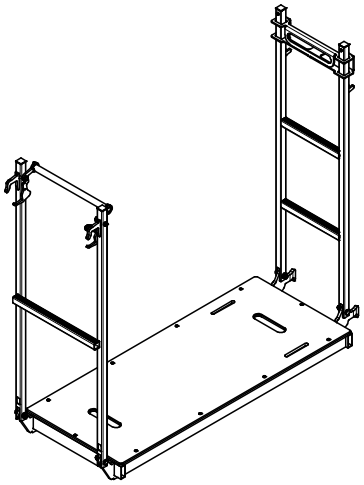

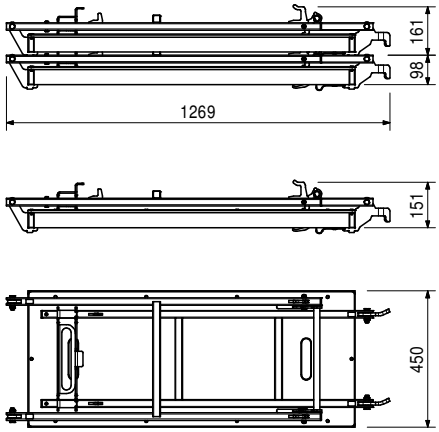

112012	6.650	**Base Frame MDS**

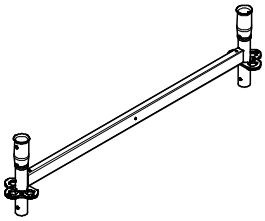

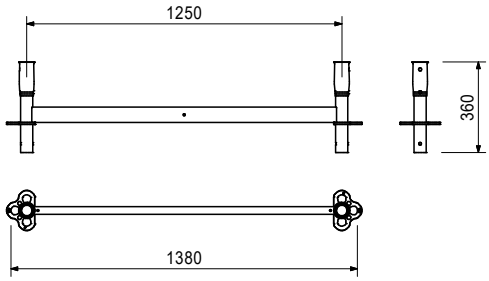

131806	15.100	**Frame MDS 100 K**

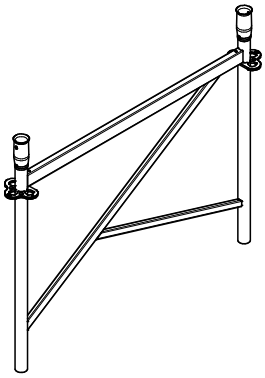

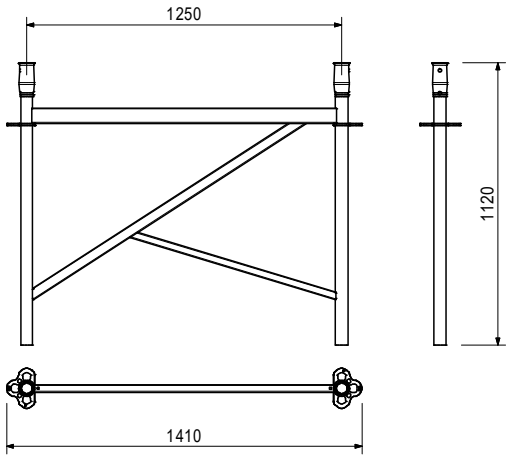

Article no.	Weight kg	
112059	8.640	**End Frame MDS 50**

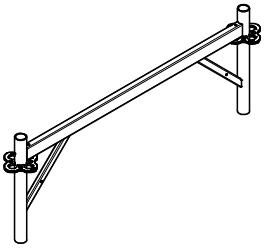

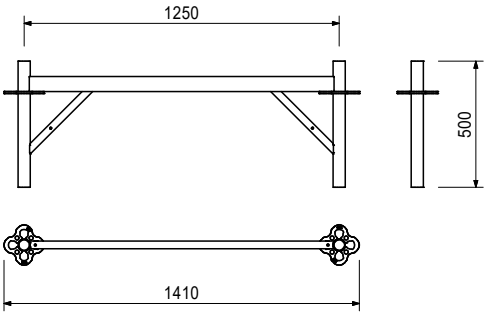

112034	9.190	**Intermediate Frame MDS 50**

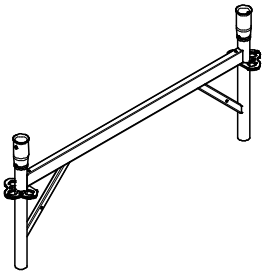

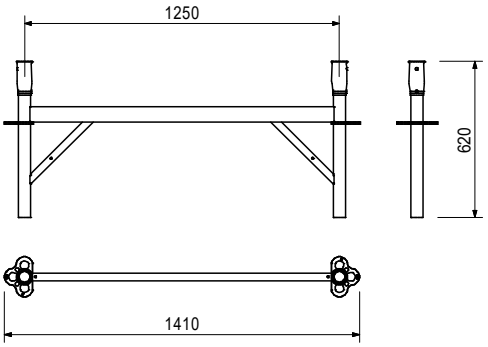

019780	5.250	**Base Spindle TR 38-70/50** For higher loaded shoring scaffolds.

Note
With captive silver quick jack nut.

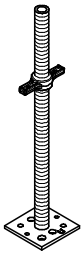

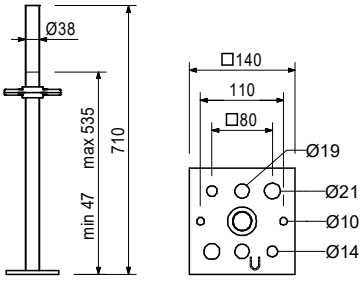

100411	3.390	**Base Spindle UJB 38-50/30**

Note
With captive red quick jack nut.

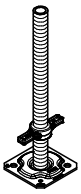

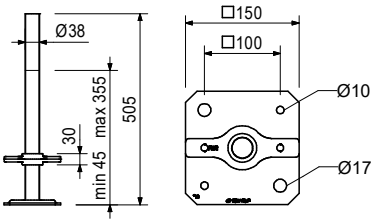

Article no.	Weight kg	
019950	7.770	**Crosshead Spindle TR 38-70/50** Head spindle providing stable support for one or two GT 24 or VT 20 girders. **Note** With captive quick jack nut.

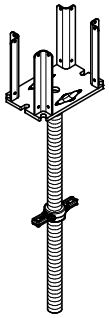

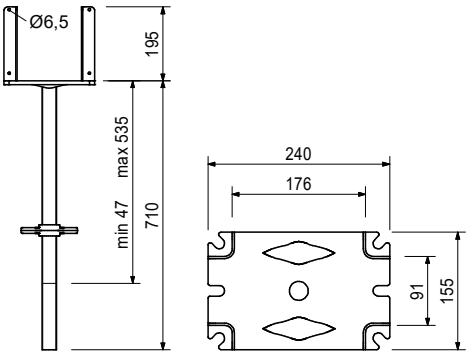

Accessories

028590	0.568	**Tension strap for twin main beam, 16-25, galv.**

116081	7.040	**Pivoting Head Spindle-2 TR 38-70/50** Maximum inclination of the head plate on all sides 4.4°. **Note** With anti-twist device and captive quick jack nut.

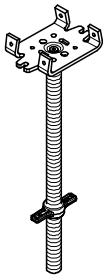

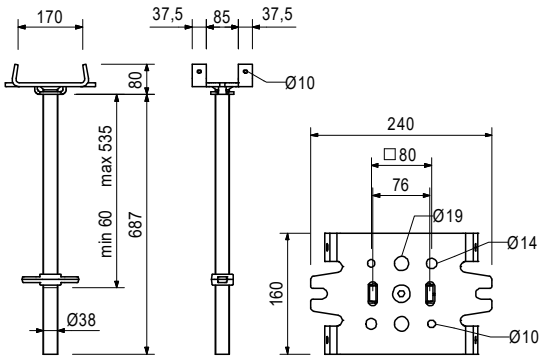

Accessories

028590	0.568	**Tension strap for twin main beam, 16-25, galv.**
018300	0.564	**Cross strap, galv.**

109563	1.460	**Head Spindle Locking UJH** Connects head spindles, section spindles and spindle head with Horizontal Ledgers UH during repositioning. **Complete with** 1 pc. 018060 cotter pin 4/1, galv. **Technical data** Permissible load 2.1 kN.

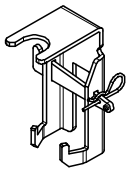

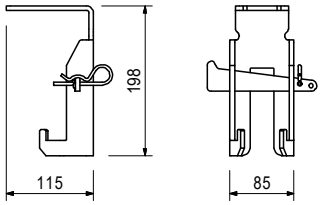

Article no.	Weight kg	
100863	1.020	**Spindle Locking UJS** Locks base spindles and section spindles Ø 38 mm in the leg during moving procedures.

Technical data
Permissible load 1.5 kN.

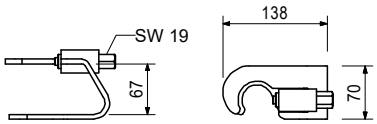

			L	X
		Horizontal Ledger UH Plus		
114613	1.420	**Horizontal Ledger UH 25 Plus**	204	250
114595	2.070	**Horizontal Ledger UH 50 Plus**	454	500
114629	2.730	**Horizontal Ledger UH 75 Plus**	704	750
114632	4.390	**Horizontal Ledger UH 100 Plus**	954	1,000
114638	5.340	**Horizontal Ledger UH 125 Plus**	1,204	1,250
114641	4.720	**Horizontal Ledger UH 150 Plus**	1,454	1,500
117032	5.380	**Horizontal Ledger UH 175 Plus**	1,704	1,750
114645	6.040	**Horizontal Ledger UH 200 Plus**	1,954	2,000
116356	6.700	**Horizontal Ledger UH 225 Plus**	2,204	2,250
114648	7.360	**Horizontal Ledger UH 250 Plus**	2,454	2,500
114651	8.680	**Horizontal Ledger UH 300 Plus**	2,954	3,000

Note
With length marking for easier identification.

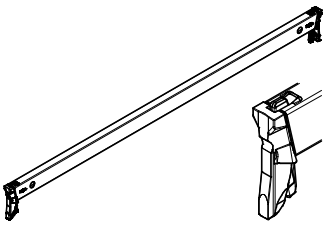

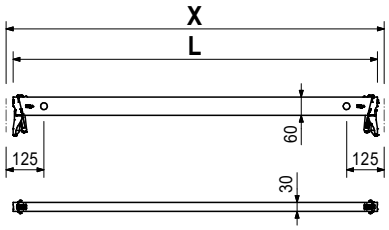

			L	X
		Horizontal Ledger UH-2		
131995	1.40	**Horizontal Ledger UH-2 25**	204	250
133900	1.50	**Horizontal Ledger UH-2 33**	284	330
131998	2.03	**Horizontal Ledger UH-2 50**	454	500
133903	2.48	**Horizontal Ledger UH-2 67**	624	670
132213	2.69	**Horizontal Ledger UH-2 75**	704	750
132004	3.79	**Horizontal Ledger UH-2 100**	954	1,000
132007	4.58	**Horizontal Ledger UH-2 125**	1,204	1,250
132010	4.68	**Horizontal Ledger UH-2 150**	1,454	1,500
132013	5.34	**Horizontal Ledger UH-2 175**	1,704	1,750
132016	6.00	**Horizontal Ledger UH-2 200**	1,954	2,000
132019	6.66	**Horizontal Ledger UH-2 225**	2,204	2,250
132025	7.32	**Horizontal Ledger UH-2 250**	2,454	2,500
132022	8.65	**Horizontal Ledger UH-2 300**	2,954	3,000

Note
With length marking for easier identification.

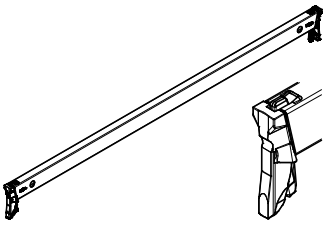

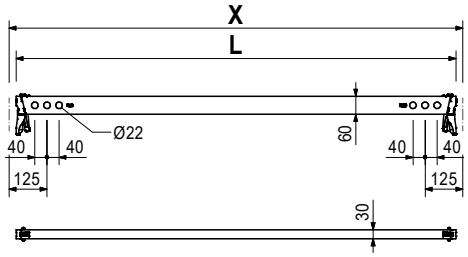

Article no.	Weight kg	Ledger Brace UBL	L	X	Y
		Ledger Brace UBL			
115156	2,660	**Ledger Brace UBL 100/50**	901	1,000	500
115513	4,640	**Ledger Brace UBL 100/150**	1,677	1,000	1,500
107867	3,790	**Ledger Brace UBL 150/50**	1,347	1,500	500
100055	4,440	**Ledger Brace UBL 150/100**	1,601	1,500	1,000
102846	5,340	**Ledger Brace UBL 150/150**	1,953	1,500	1,500
100057	6,380	**Ledger Brace UBL 150/200**	2,358	1,500	2,000
109034	6,740	**Ledger Brace UBL 175/200**	2,500	1,750	2,000
104391	5,000	**Ledger Brace UBL 200/50**	1,820	2,000	500
100059	5,510	**Ledger Brace UBL 200/100**	2,016	2,000	1,000
102862	6,240	**Ledger Brace UBL 200/150**	2,305	2,000	1,500
100061	7,150	**Ledger Brace UBL 200/200**	2,658	2,000	2,000
130282	5,620	**Ledger Brace UBL 225/50**	2,062	2,250	500
130283	6,070	**Ledger Brace UBL 225/100**	2,236	2,250	1,000
117689	7,580	**Ledger Brace UBL 225/200**	2,829	2,250	2,000
100063	6,640	**Ledger Brace UBL 250/100**	2,462	2,500	1,000
102861	7,260	**Ledger Brace UBL 250/150**	2,705	2,500	1,500
100065	8,050	**Ledger Brace UBL 250/200**	3,010	2,500	2,000
104762	7,490	**Ledger Brace UBL 300/50**	2,795	3,000	500
100067	7,830	**Ledger Brace UBL 300/100**	2,926	3,000	1,000
104766	8,360	**Ledger Brace UBL 300/150**	3,133	3,000	1,500
100069	9,040	**Ledger Brace UBL 300/200**	3,400	3,000	2,000

They are attached using holes in the horizontal ledgers.

Note

With length marking for easier identification.
UBL 150/250 is identical to UBL 300/50
UBL 225/150 is identical to UBL 175/200
UBL 250/50 is identical to UBL 200/150
UBL 75/200 is identical to UBL 225/50

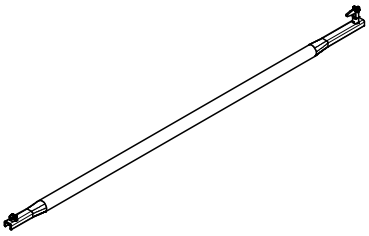

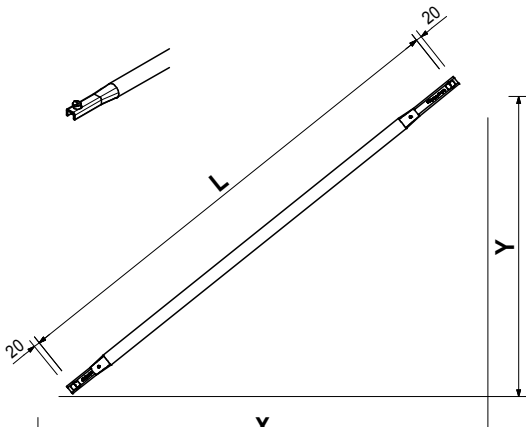

Article no.	Weight kg	Ledger Braces UBL-2	L	X	Y
132771	2.12	**Ledger Brace UBL-2 100/ 50**	901	1,000	500
132773	2.81	**Ledger Brace UBL-2 100/100**	1,250	1,000	1,000
132775	3.66	**Ledger Brace UBL-2 100/150**	1,677	1,000	1,500
132777	4.58	**Ledger Brace UBL-2 100/200**	2,136	1,000	2,000
132779	3.01	**Ledger Brace UBL-2 150/ 50**	1,347	1,500	500
132781	3.51	**Ledger Brace UBL-2 150/100**	1,601	1,500	1,000
132783	4.21	**Ledger Brace UBL-2 150/150**	1,953	1,500	1,500
132785	5.02	**Ledger Brace UBL-2 150/200**	2,358	1,500	2,000
132787	5.31	**Ledger Brace UBL-2 175/200**	2,500	1,750	2,000
132789	3.95	**Ledger Brace UBL-2 200/ 50**	1,820	2,000	500
132791	4.34	**Ledger Brace UBL-2 200/100**	2,016	2,000	1,000
132793	4.92	**Ledger Brace UBL-2 200/150**	2,305	2,000	1,500
132795	5.62	**Ledger Brace UBL-2 200/200**	2,658	2,000	2,000
132797	4.43	**Ledger Brace UBL-2 225/ 50**	2,062	2,250	500
132808	4.78	**Ledger Brace UBL-2 225/100**	2,236	2,250	1,000
132810	5.96	**Ledger Brace UBL-2 225/200**	2,829	2,250	2,000
132812	5.23	**Ledger Brace UBL-2 250/100**	2,462	2,500	1,000
132814	5.71	**Ledger Brace UBL-2 250/150**	2,705	2,500	1,500
132816	6.32	**Ledger Brace UBL-2 250/200**	3,010	2,500	2,000
132827	5.90	**Ledger Brace UBL-2 300/ 50**	2,795	3,000	500
132829	6.16	**Ledger Brace UBL-2 300/100**	2,926	3,000	1,000
132831	6.57	**Ledger Brace UBL-2 300/150**	3,133	3,000	1,500
132833	7.10	**Ledger Brace UBL-2 300/200**	3,400	3,000	2,000

They are attached using holes in the horizontal ledgers.

Note,
With colour-coded length marking.
UBL-2 150/250 is identical to UBL-2 300/50
UBL-2 225/150 is identical to UBL-2 175/200
UBL-2 250/50 is identical to UBL-2 200/150
UBL-2 75/200 is identical to UBL-2 225/50

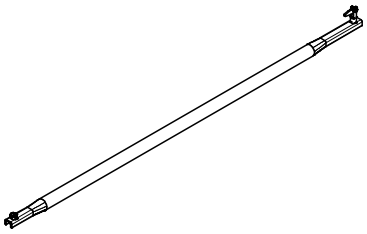

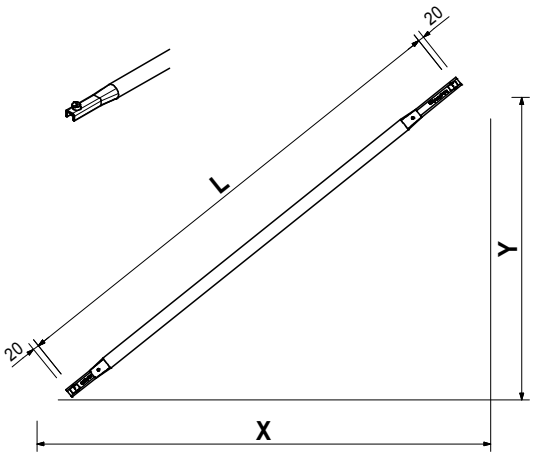

Article no.	Weight kg	
019200	162.000	**Trolley and Winch Unit** For moving towers and tables with MULTIPROP, PERI UP Flex, PERI UP Flex Plus, PERI UP Flex MDS K and PD 8 with respective support for the system.

Note
Follow the instructions for use!
Technical data
Permissible load-bearing capacity 1.0 t.

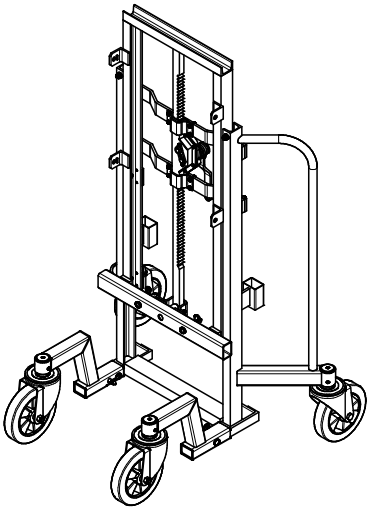

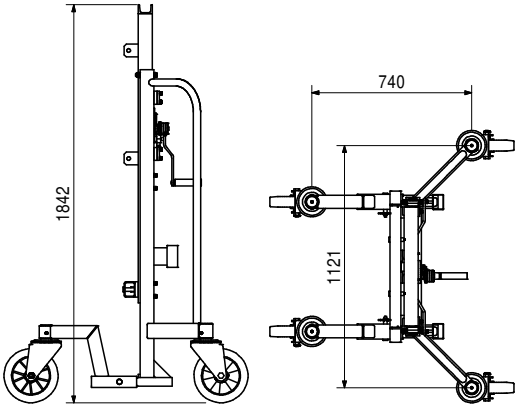

Accessories

118114	14,200	**Support MP - Trolley**
130501	27,100	**Support PERI UP - Trolley**
118605	21,500	**Support Rosette - Trolley**
117954	21,200	**Support Rosette Plus - Trolley**
118115	11,000	**Support PD 8 - Trolley**

130501	27.100	**Support PERI UP - Trolley** For moving PERI UP Flex Shoring Tower, Shoring Tower Plus and Shoring Tower MDS K with the trolley with winch unit.

Note
Consisting of left and right support (4 parts).

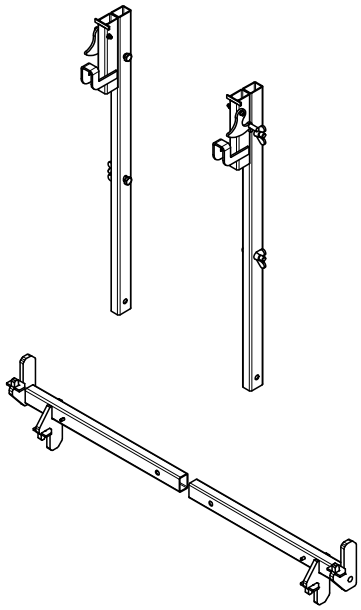

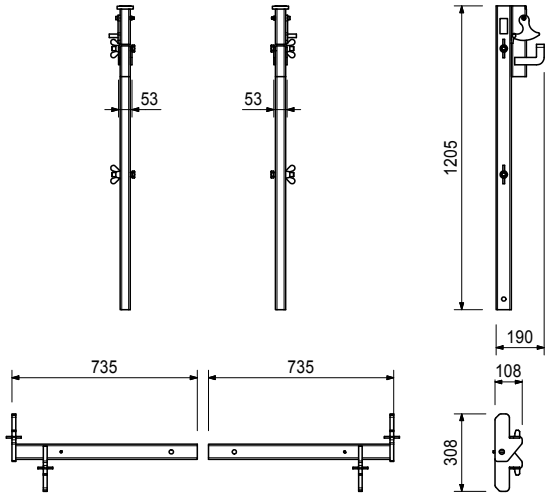

The optimum system for every project and every requirement

Wall formwork

Column formwork

Slab formwork

Climbing systems

Bridge formwork

Tunnel formwork

Shoring

Working scaffolds construction

Working scaffolds facade

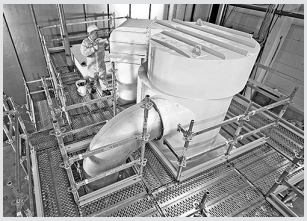
Working scaffolds industry

Means of access

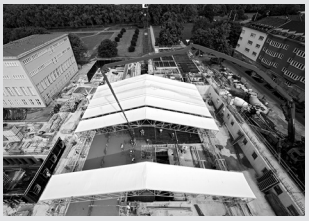
Protective scaffolds

Safety systems

System-independent accessories

Services

PERI Danmark A/S
Forskalling & Stilladssystemer
Greve Main 26
2670 Greve
Tlf. +45 4345.3627
peri@peri.dk
www.peri.dk

EN dk Version 2.1 | DO-22-0117438 © PERI Danmark A/S