PERI UP Flex
Shoring tower

Instructions for Assembly and Use – standard configuration – Version 2.1

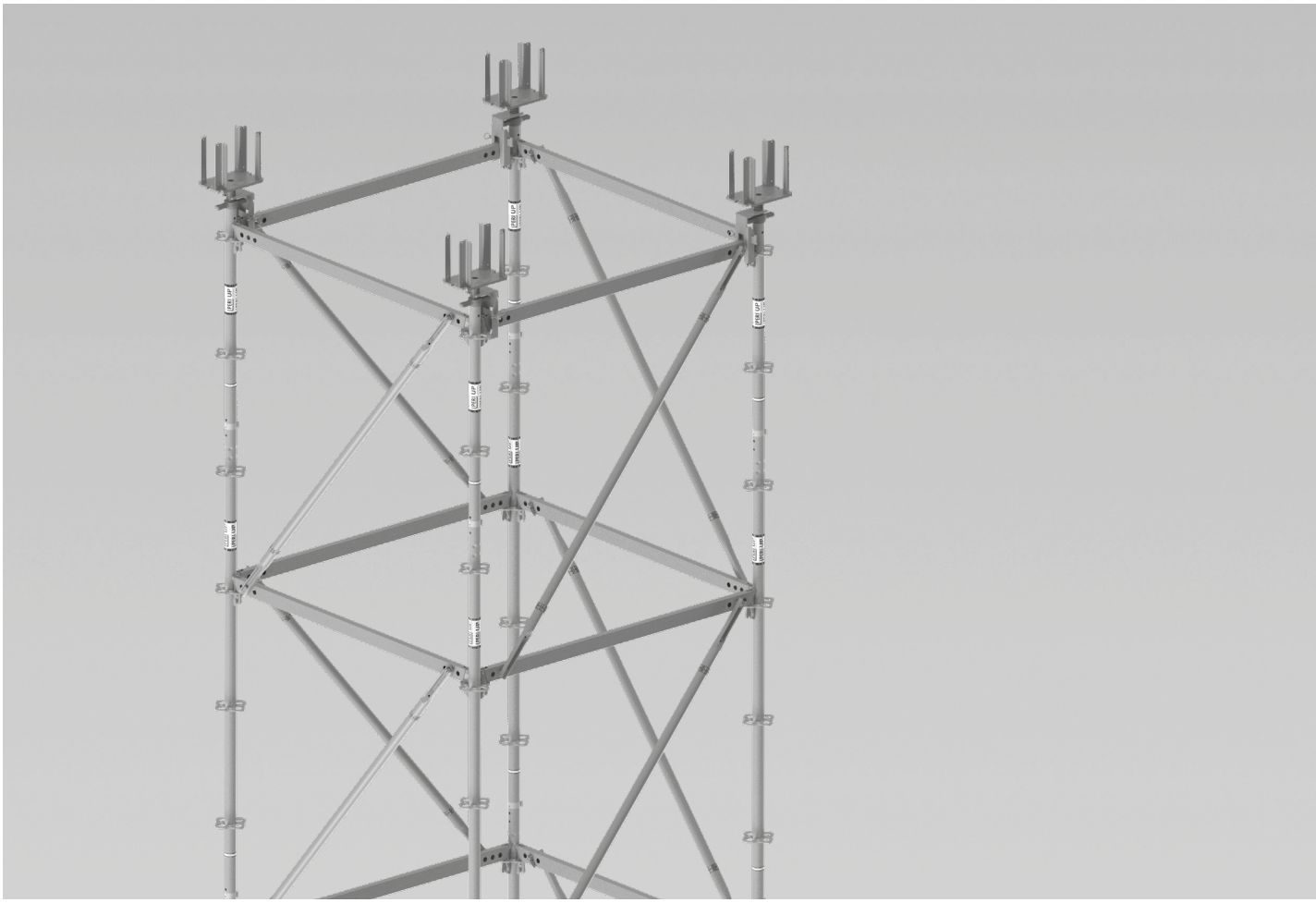

Content

Overview
Main components 4
Key 5

Introduction
Target groups 6
Product description 7
Cleaning and maintenance instructions 8
Additional technical documentation 9
Instructions for Use 9

Safety instructions
Cross-system 10
System-specific 12

General information
A1 Safety during assembly 14
Assembly levels 14
Verified attachment points 14
Attachment points in the system 15
A2 Component overview 16
A3 Tool list 17
Tightening torques 17

Application
B1 PERI UP Flex Shoring Tower 18
General information 18
Base unit 18
Standards and ledgers 19
Height units 20
Ledgers and braces 20
Top tower unit 21
Height design 22
Erection with the crane 23
Dismantling 24
B2 Additional frames 25
Ground plans 25
Dimensions 25
Brace arrangement 25
General information 26
Base Frame VSS 26
Standards and Ledgers VSS 26
Height Units VSS 26
Ledgers and Braces VSS 27
Head Element with Height Adjustment VSS 27
Erection with the crane 28
Dismantling 29
B3 Support 30
Supporting individual towers 30
Bracing a set of shoring towers 31

Supplementary system components
C1 Moving the shoring tower 32
Trolley with winch 32
C2 Inclined surfaces 34
General information 34
Inclined erection surface 34
Inclined slab deck 37

Storage and transportation
D1 Storage and transportation 38

Static design
E1 Shoring tower, restrained at the top 40
without additional ledger 40
with additional ledger 42
E2 Free-standing shoring tower 44

Program overview
PERI UP Flex Shoring Tower 46

Main components

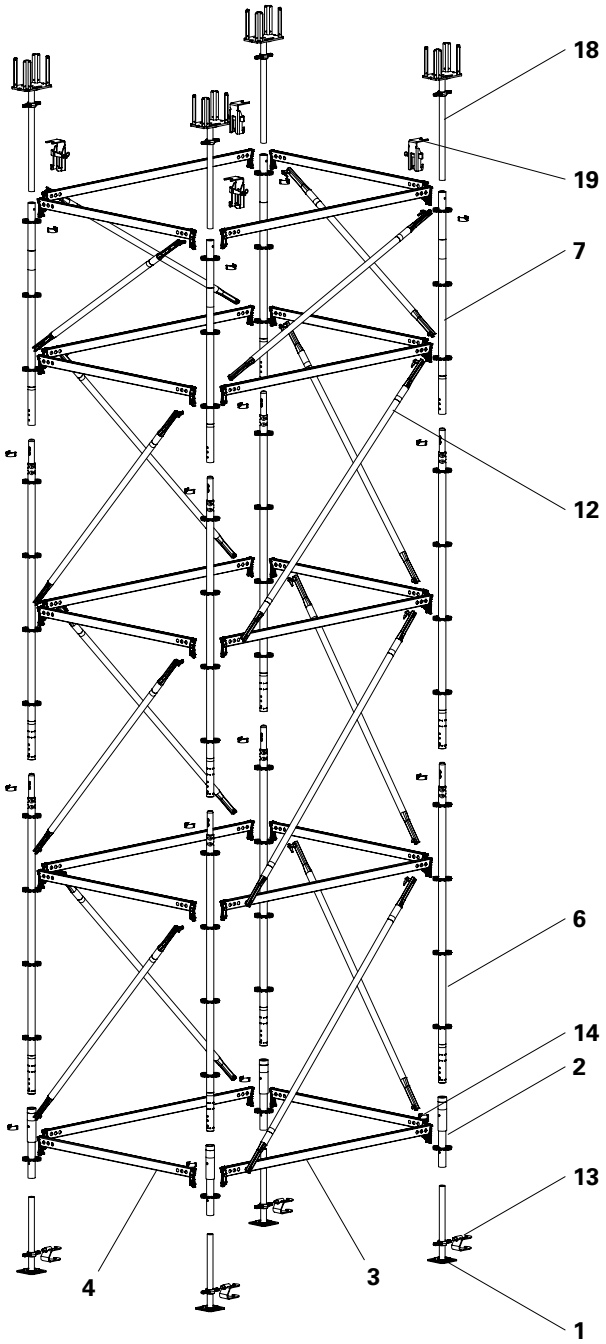

1 Base Spindle UJB
2 Base Standard UVB 25
3 Horizontal Ledger UH-2 200
4 Horizontal Ledger UH-2 150
6 Standard UVR-2 200
7 Top Standard UVH-2 150
12 Ledger Brace UBL-2
13 Spindle Locking UJS
14 Pin Ø 48/57
18 Crosshead Spindle TR 38-70/50
alternatively: pivoting head spindle
19 Head Spindle Locking UJH

Key

Pictogram | Definition

- Danger/Warning/Caution
- Note
- To be complied with
- Load-bearing point
- Visual inspection
- Tip
- Incorrect use
- Safety helmet
- Safety shoes
- Safety gloves
- Safety goggles
- Personal protective equipment to prevent falling from a height (PPE)
- Observe additional documentation

Arrows

- Arrow representing an action
- Arrow representing a reaction of an action*
- Arrow representing forces

* If not identical to the action arrow.

Safety instruction categories
The safety instructions alert site personnel to the risks involved and provide information on how to avoid these risks. Safety instructions can be found at the beginning of the section or before instructions for action and are highlighted as follows:

Danger
This sign indicates an extremely hazardous situation which, if not avoided, will result in death or serious, irreversible injury.

Warning
This sign indicates a hazardous situation that could result in death or serious irreversible injury if the safety instructions are not followed.

Caution
This sign indicates a hazardous situation that could result in minor or moderate injury if the safety instructions are not followed.

Note
This sign indicates situations in which failure to observe the information can result in material damage.

Format of the safety instructions

Signal word
Type and source of hazard!
Consequences of non-compliance.
⇒ Preventative measures.

Dimensions
Dimensions are usually given in cm. Other measurement units, e.g. m, are shown in the illustrations.

Conventions
- Instructions are numbered with: 1. ....., 2. ....., 3. .....
- The result of an instruction is shown by: →
- Position numbers are clearly provided for the individual components and are given in the drawing, e.g. **1**, in the text in brackets, for example (**1**).
- Multiple position numbers, i.e. alternative components, are represented with a slash: e.g. **1/2**.

Notes on illustrations
The illustration on the front cover of these instructions is understood to be a system representation only. The assembly steps presented in these Instructions for Assembly and Use are shown in the form of examples with only one component size. They are valid for all component sizes contained in the standard configuration.

To facilitate understanding, illustrations are sometimes incomplete. The safety equipment that is not shown in these detailed descriptions must nevertheless be available.

Target groups

Contractors
These Instructions for Assembly and Use are designed for contractors who either
- assemble, modify and dismantle PERI systems, or
- use them, e.g. for concreting, or
- allow them to be used for other operations, e.g. carpentry or electrical work.

Safety and Health Protection Coordinator*
- is appointed by the client,
- must identify potential hazards during the planning phase,
- determines measures that provide protection against risks,
- creates a safety and health protection plan,
- coordinates the protective measures for the contractor and site personnel so that they do not endanger each other,
- monitors compliance with the protective measures.

Competent person
- is appointed by the contractor/scaffolding contractor,
- must be on site for all system operations,
- prepares and updates the plan for assembly, modification and dismantling,
- prepares and updates the plan for use of the system by the user,
- supervises the assembly, modification and dismantling work (supervisor).

Competent persons qualified to carry out inspections
Due to the specialist knowledge gained from professional training, professional experience and recent professional activity, the competent person qualified to carry out inspections has a reliable understanding of safety-related issues and can carry out inspections correctly. Depending on the complexity of the inspection to be undertaken, e.g. scope of testing, type of testing or the use of certain measuring devices, a range of specialist knowledge is necessary.

Qualified personnel
PERI systems may only be assembled, modified or dismantled by personnel who are suitably qualified to do so. Qualified personnel must have completed a course of training** in the work to be performed, covering the following points at least:
- Explanation of the plan for the assembly, modification or dismantling of the system in an understandable form and language.
- Description of the measures for safely assembling, modifying or dismantling the system.
- Naming of the preventive measures to be taken to avoid the risk of persons and objects falling.
- Designation of the safety precautions in the event of changing weather conditions that could adversely affect the safety of the system, as well as the personnel concerned.
- Details regarding permissible loads.
- Description of all other risks and dangers associated with assembly, modification or dismantling operations.

- **In other countries, ensure that the relevant national guidelines and regulations in the respective current version are complied with!**
- **If no country-specific regulations are available, it is recommended to proceed according to German guidelines and regulations.**

* Valid in Germany: Regulations for Occupational Health and Safety on Construction Sites 30 (RAB 30).

** Instructions are given by the contractor themselves or a competent person selected by them.

Product description

Regular assembly
These Instructions for Assembly and Use describe the standard assembly and the intended use of a PERI UP Flex Shoring Tower.

Intended use
Shoring construction in a systematic vertical position for transferring vertical and, in part, horizontal loads.
PERI products have been designed for exclusive use in the industrial and commercial sectors by suitably trained personnel only.

Foreseeable misapplications
- Discharge of loads not permitted by the system.
- Assembly, use and disassembly in an orientation, position or location not specified or shown in the standard assembly.

Features
The main feature of the PERI UP Flex Shoring Tower is the particularly rigid node connection between the rosetts of the verticals and the horizontal ledgers.

By combining standards of length L = 2.0 m and top standards of different lengths, all heights can be reached steplessly.

Shoring tower dimensions
Assembly of the shoring tower is shown using the dimensions 2.00 x 1.50 m as an example.
The following dimensions are possible:
Longitudinal direction:
1.00 / 1.50 / 2.00 / 2.50 / 3.00 m.
Transverse direction:
1,00 / 1.50 / 2.00 / 2.50 / 3.00 m.
Any combination is permissible.

PERI UP Flex Shoring Tower
Type-tested assembly heights as an individual shoring tower, free-standing up to 8.39 m; restrained at the top up to 21.89 m for ground plans covering 1.00 x 1.00 m and more.

PERI UP Flex Shoring Tower with Additional Frame (VSS)
Assembly heights of 1.33 m to 21.89 m.

Technical data
For permissible load-bearing capacities, see Section “Static design” from Page 40
PERI UP Flex Shoring Towers correspond to Rating Class B1 in accordance with DIN EN 12812.
Wind attack surfaces due to icing are not taken into account.
Snow and ice loads are not taken into account.

Cleaning and maintenance instructions

In order to maintain the value and operational readiness of the scaffolding materials over the long term, clean the panels after each use.

Some repair work may also be inevitable due to the tough working conditions.

The contractor must ensure that the personal protective equipment required for cleaning, maintenance and repair work such as

- Safety helmet,
- Safety shoes,
- Safety gloves,
- Safety goggles,

is available and used as intended.

The following instructions should help to keep cleaning and maintenance costs as low as possible.

Cleaning tools must be adapted to the respective surfaces of the components so that they are not damaged.

Never clean powder-coated components, e.g. elements and accessories, with a steel brush or hard metal scraper; this ensures that the powder coating remains intact.

Mechanical components, e.g. spindles or gear units, must be cleaned of dirt or concrete residue before and after use.

Provide suitable support for the components during cleaning so that no unintentional change in their position is possible.

Do not clean components suspended on crane lifting gear.

Any repairs to PERI products are to be carried out by PERI qualified personnel only.

Additional technical documentation

- Type test for PERI UP Flex Shoring Towers
- Assembly instructions for PERI UP Scaffolding Kit core components
- Instructions for Use
  - Trolley with winch
- User information
  - Pallets and stacking devices
- Data sheet – Tie bolt PERI 14/20 x 130
- PERI Design Tables – Formwork and shoring
- PERI UP Design Tables

Instructions for Use

Use in a way not intended, deviating from the standard configuration or the intended use according to the Instructions for Assembly and Use, represents an application with a potential safety risk, e.g. risk of falling.

Deviations from the standard configuration must be verified for the application by means of separate strength and stability calculations and explicitly reflected in the assembly instructions.

All components listed in the program overview may be used for assembly. Other components are not permitted. Exceptions are named or must be planned and verified on a project-specific basis.

The use of other products and spare parts is not allowed.

Changes to PERI components are not permitted.

The system described in these Instructions for Assembly and Use may contain patent-protected components.

Cross-system

Safety instructions apply to all service life phases of the system.

General information
The contractor must ensure that the Instructions for Assembly and Use supplied by PERI are available at all times and understood by the site personnel.

These Instructions for Assembly and Use can be used as the basis for creating a risk assessment. The risk assessment is compiled by the contractor. The Instructions for Assembly and Use are not a substitute for a risk assessment!

Observe and comply with the safety instructions and permissible loads.

For the application and inspection of PERI products, observe the current laws and regulations in force in the respective countries.

Materials and working areas are to be inspected before each use and assembly for:
- damage,
- stability and
- functional correctness.

Damaged components must be exchanged immediately on site and may no longer be used.

Safety components are to be removed only when they are no longer required.

When on slab formwork, scaffolds and working platforms:
- do not jump,
- do not run,
- do not drop anything from or onto it.

Components provided by the contractor must comply with the characteristics stipulated in these Instructions for Assembly and Use and all applicable laws and standards. Unless otherwise indicated, the following applies in particular:
- Timber components:
  Strength class C24 for solid wood according to EN 338.
- Scaffold tubes:
  Galvanised steel tubes with minimum dimension Ø 48.3 x 3.2 mm according to EN 12811-1:2003 4.2.1.2.
- Scaffold tube couplings:
  according to EN 74-1 and EN 74-2.

Deviations from the standard configuration are only permitted after a further risk assessment has been carried out by the contractor.

Appropriate measures for working and operational safety, as well as stability, are defined on the basis of this risk assessment.

Corresponding proof of stability can be provided by PERI on request if the risk assessment and resulting measures to be implemented are made available.

Nails and wood screws must not protrude. Only allow other connecting components to protrude to the extent that is necessary.
If necessary, mark protruding components or fit them with protective material.
Secure all bolts with cotter pins and all screws with nuts

Before and after extraordinary events that may have damaging effects on the safety of the system, the contractor must immediately
- produce another risk assessment, the results of which must be used to implement suitable measures to ensure the stability of the system,
- arrange for an extraordinary inspection to be carried out by a competent person qualified to do so. The aim of this inspection is to detect and repair damage in good time in order to ensure the safe use of the system.

Exceptional events could be:
- accidents, fire, explosions, collisions,
- long periods of non-use,
- natural events, e.g. heavy rainfall, heavy snowfall, significant icing, storms or earthquakes.

Suitable measures could be:
- removing nets/tarpaulin,
- clearing snow and ice,
- reducing live loads,
- securing loose materials.

Assembly, modification and dismantling work
PERI systems may only be assembled, modified or dismantled under the supervision of a person qualified to do so and by technically suitable employees. The qualified personnel must have received appropriate training for the work to be carried out with regard to specific risks and dangers.

On the basis of the risk assessment and Instructions for Assembly and Use, the contractor must create installation instructions in order to guarantee safe assembly, modification and dismantling of the climbing unit.

Before initial use, the safe functioning of the scaffold must be checked by a person qualified to carry out the inspection. The results of the inspection must be documented in an inspection log.

The contractor must ensure that the personal protective equipment required for the assembly, modification or dismantling of the system, e.g.
- Safety helmet,
- Safety shoes,
- Safety gloves,
- Safety goggles,

is available and used as intended.

For work at a higher level, use an approved ladder or platform system, or an assembly scaffold.

If personal protective equipment against falling from a height (PPE) is required or specified in local regulations, the contractor must determine appropriate attachment points on the basis of the risk assessment.
The PPE to be used to prevent falling is determined by the contractor.

The contractor must
- provide safe working areas for site personnel, which are to be reached through the provision of safe access ways. cordon off and clearly mark danger zones.
- guarantee stability during all stages of construction, in particular during assembly, modification and dismantling operations.
- ensure and demonstrate that all loads that occur are safely transferred.

Use
Every contractor who uses or allows the PERI systems to be used, is responsible for ensuring that the equipment is in good condition.

If the system is used successively or at the same time by several contractors, the health and safety coordinator must point out any possible mutual hazards and all work must then be coordinated.

When systems are used in publicly accessible areas,
- measures to prevent unauthorised use, e.g. enclosure of access areas, must be taken.
- Measures are taken against injuries caused by bumping against protruding components, e.g. assembly of protective components.

Always keep the contact surfaces of the system free of dirt, objects, snow and ice.
Close off the system in extreme weather conditions.

System-specific

Load-distributing supports, e.g. planks, must be suitable for the substrate and the loads to be transferred. If multiple layers are required, planks are to be arranged crosswise.
It must be ensured that the scaffolding cannot shift in a horizontal direction, irrespective of what substrate is being used.

Access hatches close automatically. Do not disable the mechanism.

Couplings with screw closures must be tightened with 50 Nm. This corresponds to a force of 20 kg using a lever arm length of 25 cm.

Hammer the wedges with a 500 g hammer with a jarring blow.

Protect shoring towers against impact loads, e.g. trucks. Impact loads are determined on a project-specific basis.

Ensure that the relevant national guidelines and regulations are complied with!

Assembly levels

PERI recommends that assembly levels be used. Depending on the requirements, these can be realised in different ways.

→ See the assembly instructions for PERI UP Scaffolding Kit core components.

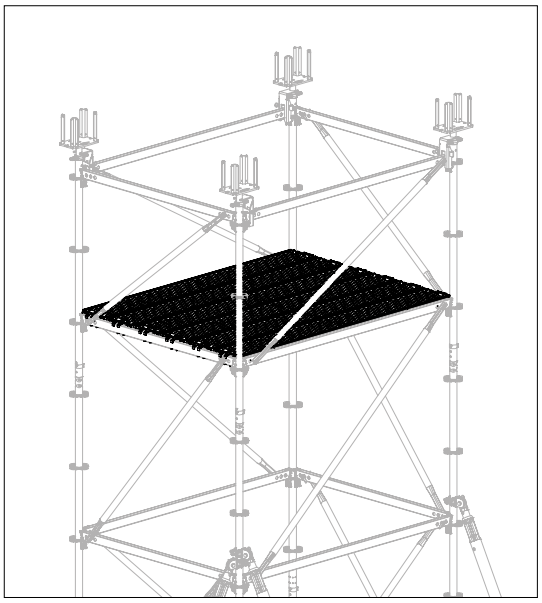

Fig. A1.01

Verified attachment points

Certain assembly situations could occur that require the use of personal protective equipment (PPE) to prevent falling from a height. For this, the following verified attachment points must be used:

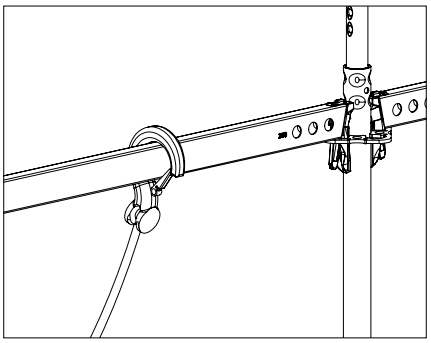

Fig. A1.02

Horizontal ledger
Attachment point:
Each Horizontal Ledger UH Plus or UH-2

- which is freely accessible for the lifting gear
- and is installed at a maximum height of 1.0 m above the deck level.
- and which is wedged on two rosetts of 2 standards.
  The standards must be butt-jointed at least 0.5 m below the deck level.

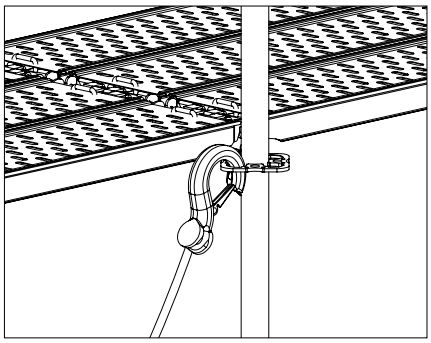

Fig. A1.03

Rosett
Attachment point:
Each rosett that is integrated in the base scaffold. See rules and regulations on the right.

Attachment points in the system

Each specified attachment point is intended for securing only one person!

General information

- The use of personal protective equipment to prevent falling from a height is regulated in the project-related risk assessment that has been prepared by the contractor (user).
- When using personal protective equipment to prevent falling from a height, all valid standards and safety regulations are to be taken into consideration by the contractor.
- Each scaffold assembly is to be secured against tipping by the user.
- The application concerns assembly, reconstruction and dismantling.

Requirements

- The scaffold assembly underneath the final assembly level is complete. This means, all ledgers and diagonal bracing have been installed and the decking is in place as the topmost assembly level.
- The joints of the topmost standards must lie underneath the last assembly level.

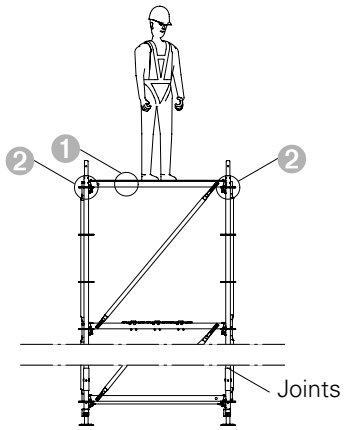

Fig. A1.04

Attachment points
Standard ends approx. 2 m below the assembly level:
each horizontal ledger in the assembly level 1,
each rosett in the assembly level 2.

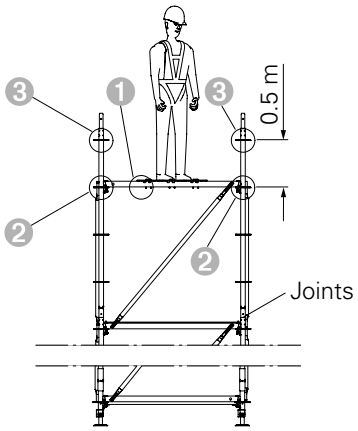

Fig. A1.05

Attachment points
Standard ends approx. 1.5 m below the assembly level:
each horizontal ledger in the assembly level 1,
each rosett up to max. 0.5 m above the last assembly level 2, 3.

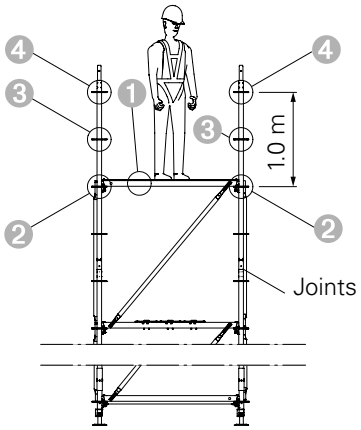

Fig. A1.06

Attachment points
Standard ends approx. 1 m below the assembly level:
each horizontal ledger in the assembly level 1,
each rosett up to max. 1.0 m above the last assembly level 2 3 4.

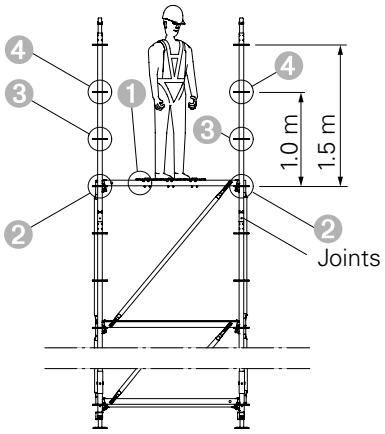

Fig. A1.07

Attachment points
Standard ends approx. 0.5 m below the assembly level:
each horizontal ledger in the assembly level 1,
each rosett up to max. 1.0 m above the last assembly level 2 3 4.

A2 Component overview

Pos. no.	Component name	Article no.
1	Base Spindle UJB 38-50/30	100411
2	Base Standard UVB 25	133499
3	Horizontal Ledger UH-2 200	132016
4	Horizontal Ledger UH-2 150	132010
5	Horizontal Ledger UH-2 100	132004
6	Standard UVR-2 200	132234
7	Top Standard UVH-2 150	132198
8	Top Standard UVH-2 250	132202
9	Ledger Brace UBL-2 150/100	132781
10	Ledger Brace UBL-2 150/150	132783
11	Ledger Brace UBL-2 200/100	132791
12	Ledger Brace UBL-2 200/150	132793
13	Spindle Locking UJS	100863
14	Pin Ø 48/57	111053
15	H-Brace UBH Flex 200/150	124097
18	Crosshead Spindle TR 38-70/50	019950
19	Head Spindle Locking UJH	109563
36	Connector PERI UP - Trolley	130501
37	Trolley with winch	019200
40	Push-Pull Prop RS 650	117469
41	Brace Connector HDR-2	131723
42	Base Plate-3 F. RS 210-1400	126666
43	PERI Tie Bolt 14/20 x 130	124777
53	Spindle Head SRU	109630
54	Connector MP SRU	107160
55	Filler pin Ø 21*120	104031
56	Cotter pin 4/1	018060
57	Red. Sw. Coupl. SW 38/48	102400
58	Sw. Coupl. SW 48/48	017010
59	Scaff. Tube 48.3x3.2 mm 3 m ga	026413

A3 Tool list

Tool name	Article no.
Carpenter's Hammer with Magnet, 500 g	727193
Scaff. Build Ratchet SW19/22	796061
Round slings	
4-sling lifting gear	

Tightening torques

Unless otherwise indicated, PERI recommends the following guide values for screw connections as "hand-tightened" tightening torques $M_{A,hand\text{-}tightened}$.
These guide values are based on EN 15048 with minimum Safety Factor 3 against breakage.

Quality class	Quality 4.6		Quality 8.8 and 10.9
Lubrication	**Lightly oiled**	**MoS2**	**Undefined**
Screw M8	8 Nm	6.6 Nm	8 Nm
Screw M10	16 Nm	13.0 Nm	16 Nm
Screw M12	30 Nm	23.0 Nm	30 Nm
Screw M16	65 Nm	54.0 Nm	65 Nm
Screw M20	100 Nm		100 Nm
Screw M24	150 Nm		150 Nm
Screw M30	260 Nm		260 Nm
Screw M36	350 Nm		350 Nm

Tightening torques have been determined for the following components:

Scaffold tube coupling	50 Nm

General information

The PERI UP Flex Shoring Tower is shown without additional ledgers. Assemble the shoring tower so that the wider side is lying flat on the ground. The tower is subsequently erected from this side.

Base unit

The base unit is assembled vertically up to a height of 2.0 m.
To continue the assembly process, the base unit is positioned on its side and forms the basis for the horizontal assembly.

Components		Piece count
1	Base Spindle UJB	4x
2	Base Standard UVB 25	4x
3	Horizontal Ledger UH-2 200	2x
4	Horizontal Ledger UH-2 150	2x
13	Spindle Locking UJS	4x
15	H-Brace UBH Flex (as assembly aid)	1x

Assembly

1. Assemble the base frame using the components. (Fig. B1.01)
2. Align the frame with the H-brace (**15**) at right angles. (Fig. B1.02)
3. Horizontally align frame by adjusting the base spindles (**1**).
4. Secure wedges on all ledgers using a 500 g hammer (jarring blow).
5. Secure the base spindles with spindle locking. (Fig. B1.01d)

The horizontal brace ensures perpendicularity even during transportation by crane.

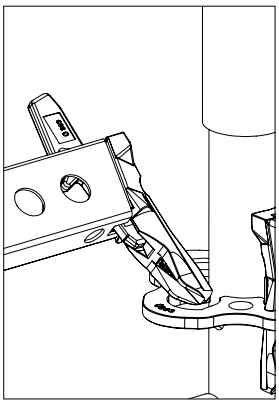

Fig. B1.01a

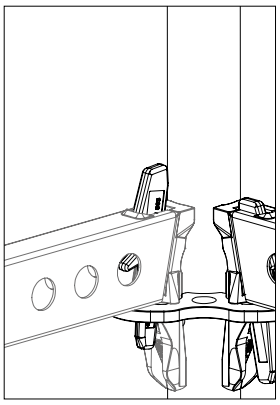

Fig. B1.01b

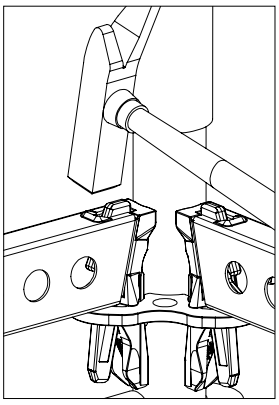

Fig. B1.01c

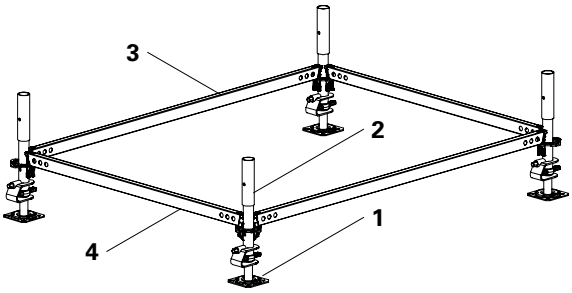

Fig. B1.01

Align all the pegging holes in the base standard in one direction.

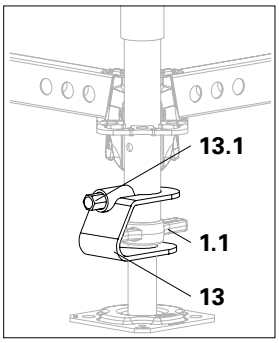

Fig. B1.01d

Fix the Spindle Locking UJS (**13**) to the bottom hole of the base standard by screwing in the screw (**13.1**). Quick jack nut (**1.1**) must be inside the Spindle Locking UJS.

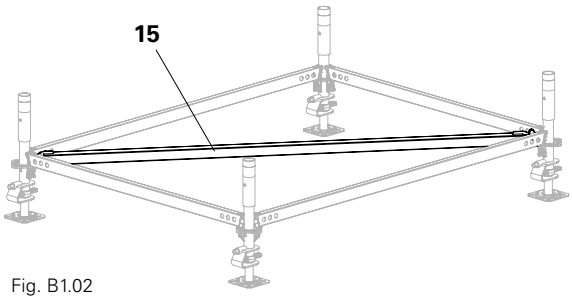

Fig. B1.02

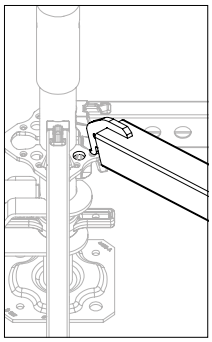

Fig. B1.02a

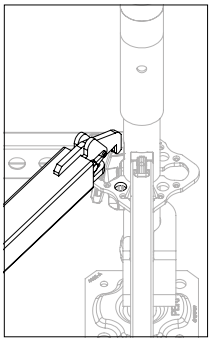

Fig. B1.02b

Standards and ledgers

Components	Piece count
3 Horizontal Ledger UH-2 200	2x
4 Horizontal Ledger UH-2 150	2x
6 Standard UVR-2 200	4x
10 Ledger Brace UBL-2 150/150	2x
12 Ledger Brace UBL-2 200/150	2x
14 Pin Ø 48/57	4x

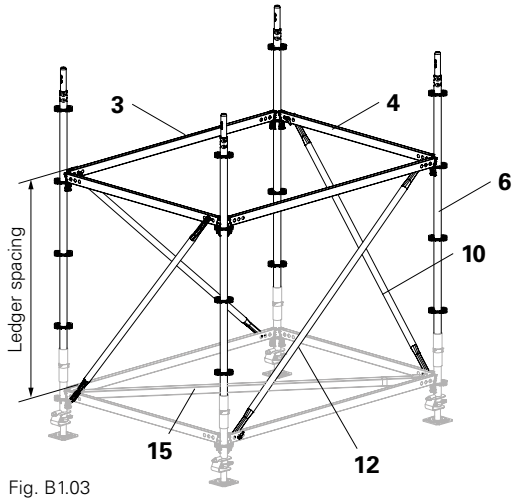

Fig. B1.03

Ledger spacing
Exemplary ledger spacing according to the type test 1.50 m.
Other ledger spacings are possible but these require a separate structural analysis. They do not form part of the type test.

Assembly
1. Insert standards (**6**) and connect them tightly using pins (**14**). (Fig. B1.03d)
2. Hook in the horizontal ledgers (**3 + 4**).
3. Insert ledger braces (**10 + 12**) with the finger (**10.1**) in the bottom horizontal edger. (Fig. B1.03a)
4. Insert the gravity pin (**10.2**) into the hole of the upper horizontal ledger, turn pin to secure. (Fig. B1.03b + Fig. B1.03c)
5. Secure the horizontal ledgers with a hammer.
6. Position the base unit on support timbers (min. 6 cm high) for further assembly.
7. If necessary, the H-Brace (**15**) can be removed.

Do not secure the horizontal ledgers with hammer blows until the ledger braces have been installed.
As an alternative to the pins Ø 48/57, screws M10x70, 8.8 with nuts M10 can always be used.

All gravity pins (**10.2**) used in the assembly process must be transverse after the Ledger Braces UBL are installed and resting on both sides of the hole. (Fig. B1.03c)

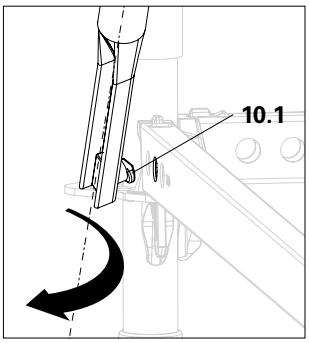

Fig. B1.03a

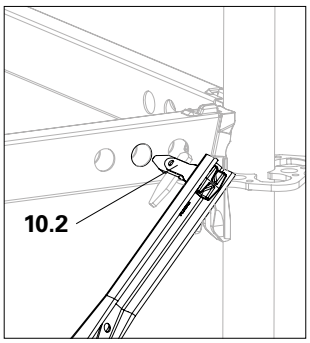

Fig. B1.03b

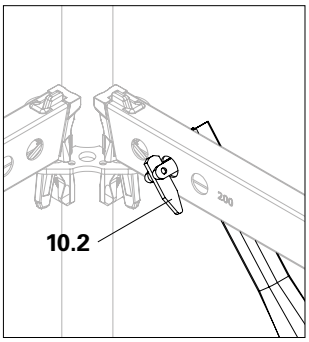

Fig. B1.03c

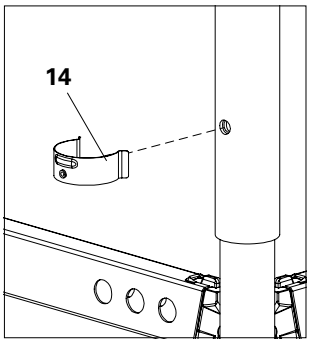

Fig. B1.03d

Height units

Standards

Components	Piece count
6 Standard UVR-2 200	4x
14 Pin Ø 48/57	4x

Assembly
Insert standards (**6**) and connect them tightly using pins (**14**).
(Fig. B1.04)

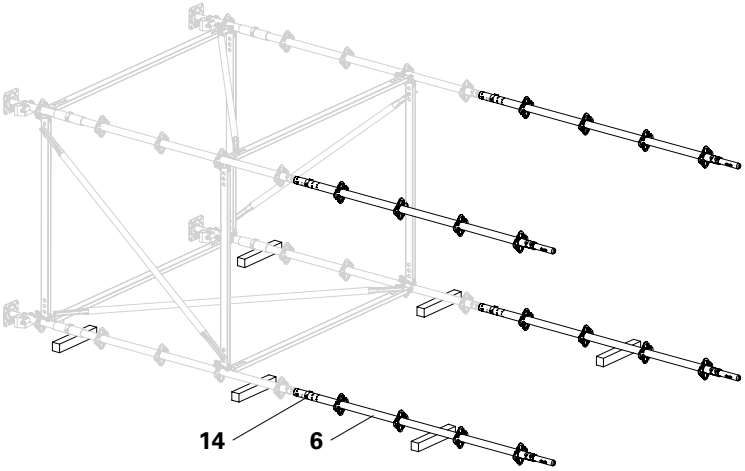

Fig. B1.04

Ledgers and braces

Components	Piece count
3 Horizontal Ledger UH-2 200	2x
4 Horizontal Ledger UH-2 150	2x
10 Ledger Brace UBL-2 150/150*	2x
12 Ledger Brace UBL-2 200/150*	2x

Assembly
1. Attach horizontal ledgers (**3 + 4**) at a distance of 1.50 m. (every 3rd rosett)
2. Fit the ledger braces (**10 + 12**):
   – Fit the bottom ledger brace (**12a**) from the inside.
   – Fit the remaining ledger braces from the outside. (Fig. B1.05)
3. Repeat steps 1 and 2 until the desired final height has been reached. Final vertical = Top Standard UVH, see top tower unit.

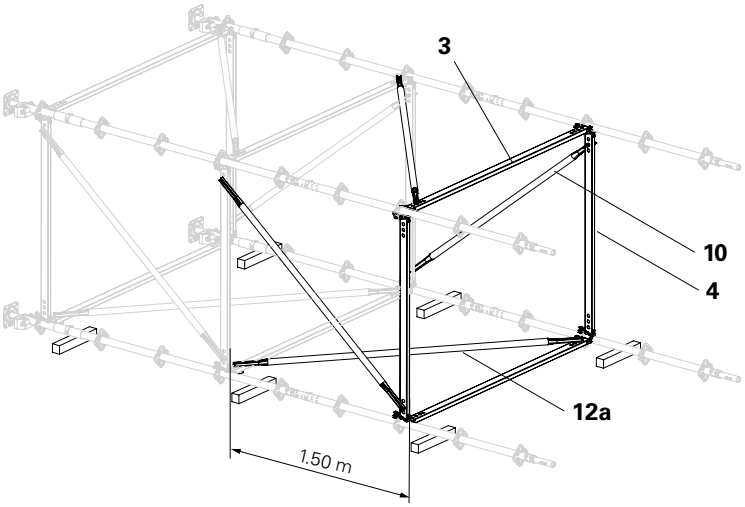

Fig. B1.05

Top tower unit

Shown here in a vertical position due to didactical reasons!
The assembly example shows a height adjustment of 1.50 m. (Fig. A1.07c)

Components		Piece count
7	Top Standard UVH-2 150	4x
3	Horizontal Ledger UH-2 200	4x
4	Horizontal Ledger UH-2 150	4x
9	Ledger Brace UBL-2 150/100	2x
10	Ledger Brace UBL-2 150/150	2x
11	Ledger Brace UBL-2 200/100	2x
12	Ledger Brace UBL-2 200/150	2x
14	Pin Ø 48/57	4x
18	Crosshead Spindle TR 38-70/50	4x
19	Head Spindle Locking UJB	4x

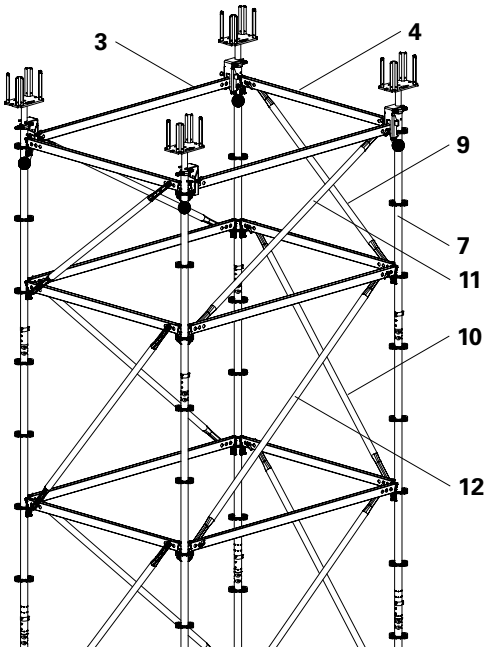

Fig. B1.06

Assembly

1. Insert top standards (**7**) to adjust the height (UVH-2 100, 150, 200, 250).
2. Connect the top standards with pins (**14**) so that they are tension-proof.
3. Hook in the horizontal ledgers (**3 + 4**).
4. Hook in the ledger braces (**9 - 12**) and secure the horizontal ledgers with a hammer.
5. Insert the crosshead spindle (**18**)
6. Place the head spindle locking (**19**) on the horizontal ledger at an angle and insert the hooks (**19.1**) into the rosett holes (**7.1**) from below.
7. Swivel the head spindle locking upwards over the quick jack nut (**18.1**), hammer in the wedge (**19.2**) and secure with a cotter pin (**19.3**).

(Fig. B1.06 – Fig. B1.06b)

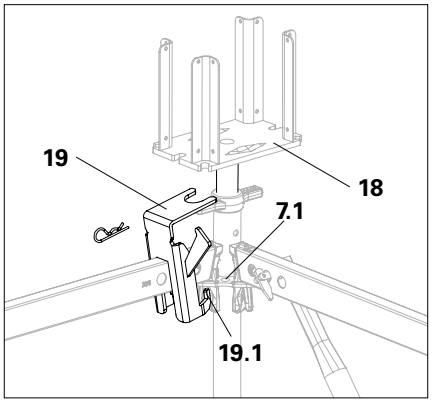

Fig. B1.06a

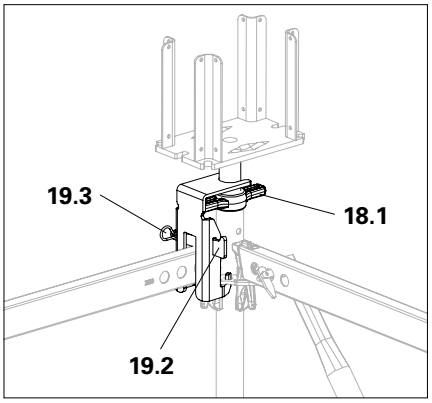

Fig. B1.06b

Height design

Leg arrangement
The Top Standard UVH-2 (**17**) must be at least 1.0 m high so that the head spindle (**18**) does not collide with the connecting spigot (**6.1**) of the standard below.

A height adjustment up to 0.5 m is carried out by adjusting the head and base spindles.

A height adjustment from 1.0 to 2.5 m is carried out in 0.5 m increments with the Top Standards UVH-2.

Further height adjustments are carried out with Standards UVR-2 200 (**6**).

Ledger arrangement
Horizontal ledgers (**4**) and ledger braces (**10**) are arranged from the bottom in a height grid of 1.50 m.

For height compensation, ledger arrangements of 1.0 m (**4 + 9**) and 1.5 m (**4 + 10**) can be suitably combined.
The increase of 0.50 m is carried out by replacing the final 1.50-m-high arrangement with a 2 x 1.00 m arrangement.

Always position the 1.0-m-high arrangement at the top.

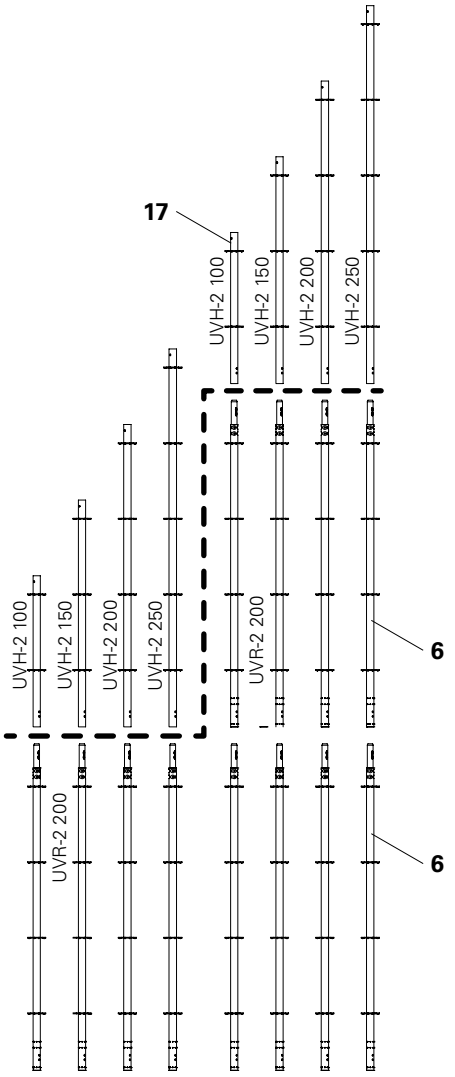

Fig. B1.07

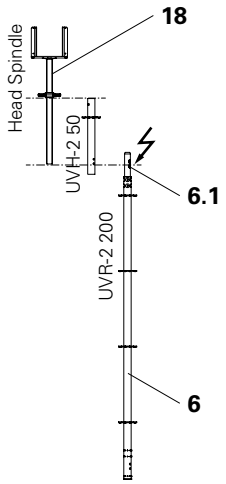

Fig. B1.07a

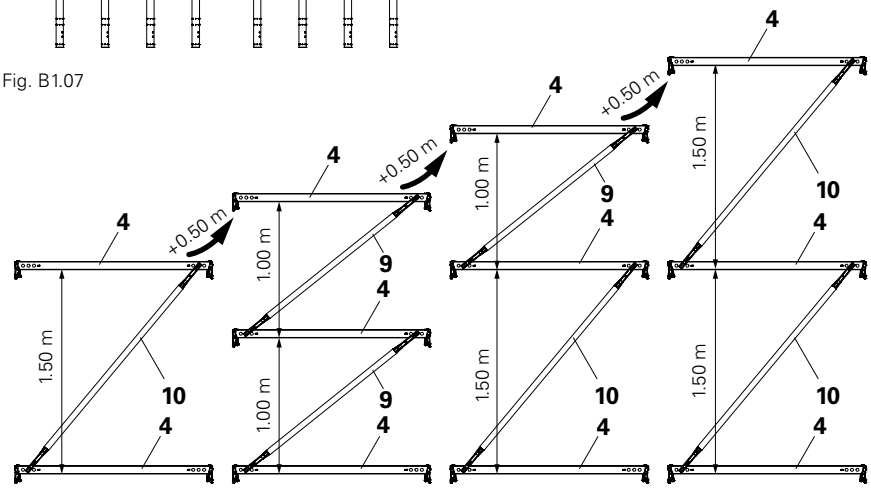

Fig. B1.08

Erection with the crane

- Ensure that all standards are tightly connected!
- Remove the lifting gear from a safe working position!
- Only attach to the rosett nodes that are directly connected to the horizontal ledgers!

Erection

1. Spindle the base spindles at the bottom all the way in to avoid overloading the components during erection.
2. Place four chains or textile lifting gear, e.g. round slings, around the bottom of the rosett node fitted with horizontal ledgers.
3. Erect the shoring tower.
4. Whilst suspended on the crane lifting gear, adjust the base spindles to the required height.

(Fig. B1.09 + Fig. B1.09)

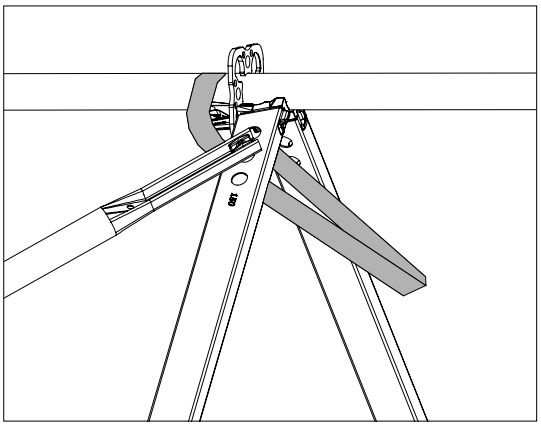

Fig. B1.09a

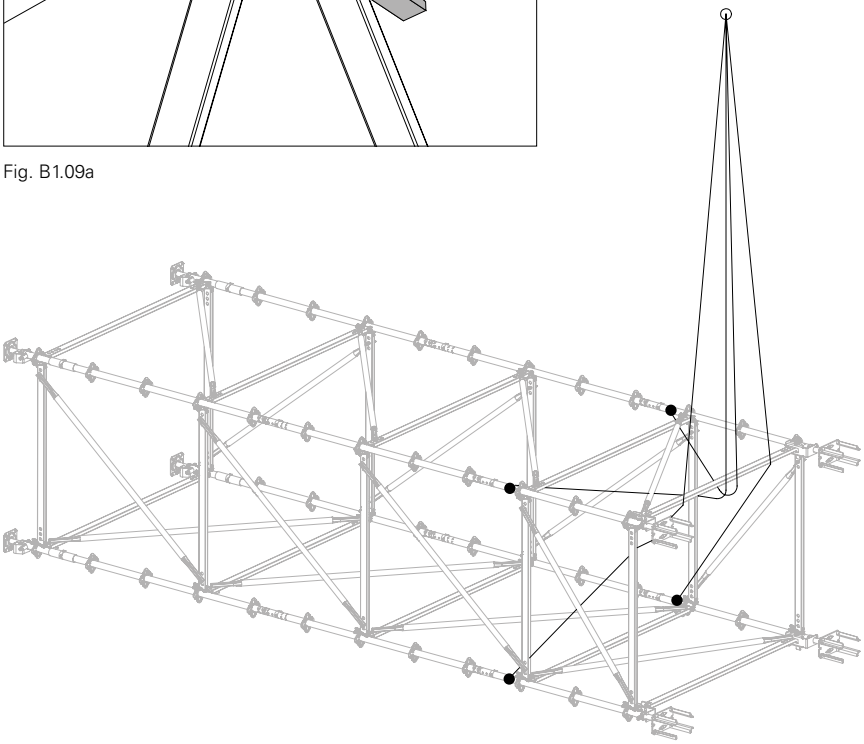

Fig. B1.09

Dismantling

- Ensure that all standards are tightly connected!
- Attach the lifting gear from a safe working position!
- Only attach to the rosett nodes that are directly connected to the horizontal ledgers!

1. Place four chains or textile lifting gear, e.g. round slings, around the bottom of the rosett node fitted with horizontal ledgers and attach to the crane. (Fig. B1.10)
2. Spindle the base spindles at the bottom all the way in to avoid overloading the components during the set-down process.
3. Using the wider side, position the tower on support timbers with the crane.
4. Dismantle the tower starting from the head side:
   – Remove the head spindles.
   – Dismantle each height unit in turn. First dismantle ledger braces and horizontal ledgers, then standards.
   – Dismantle the base unit.
5. Store components in a sorted manner, e.g. pallets.

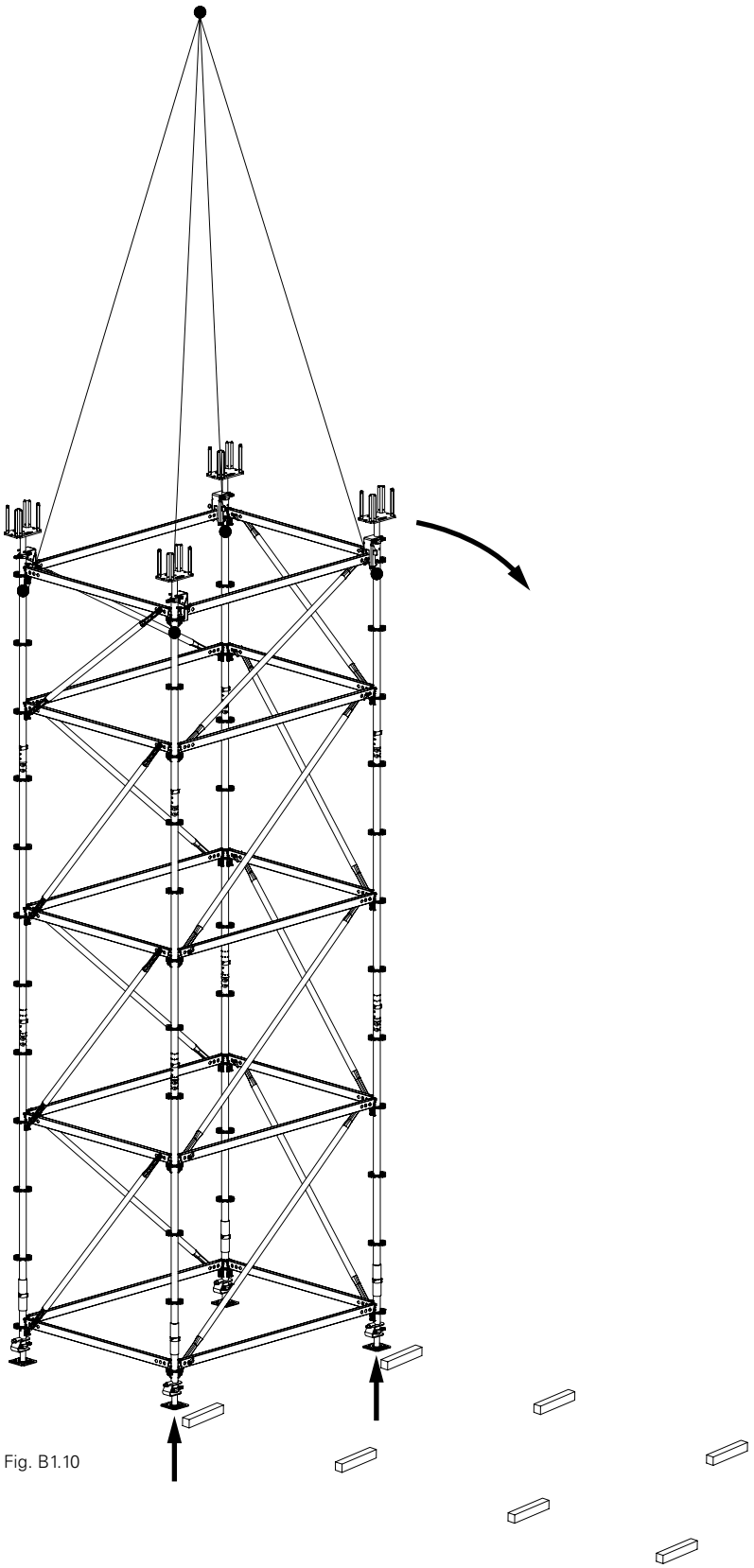

Fig. B1.10

Ground plans

For transferring concentrated loads while simultaneously saving on materials, up to 2 Additional Frames (VSS) can be connected on an individual tower. The distance between the frames can be freely selected according to the requirements. (Fig. B2.01a + Fig. B2.01b)

A maximum of 2 VSS can be coupled in series. (Fig. B2.01c + Fig. B2.01d Extensions over the corners are not permitted. (Fig. B2.01e + Fig. B2.01f)

The assembly example shown is carried out on a 2.00 x 1.50 m shoring tower with 2x VSS, 1.00 m each.

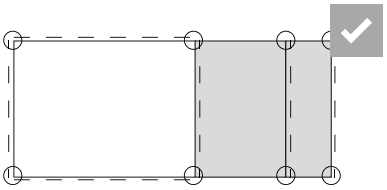

Fig. B2.01a

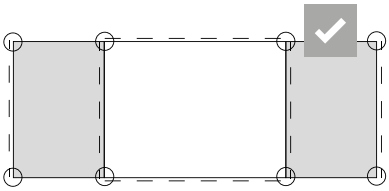

Fig. B2.01b

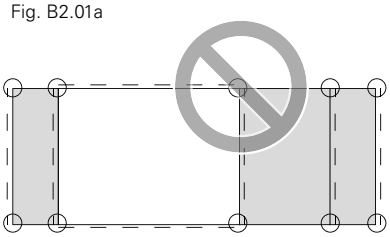

Fig. B2.01c

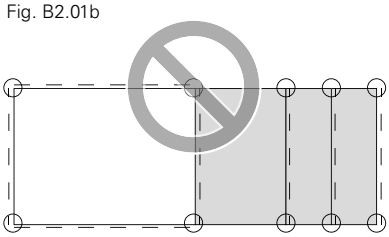

Fig. B2.01d

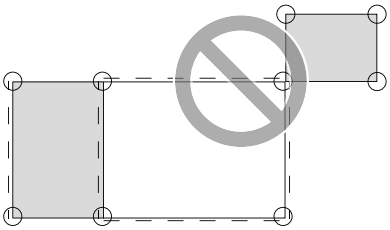

Fig. B2.01e

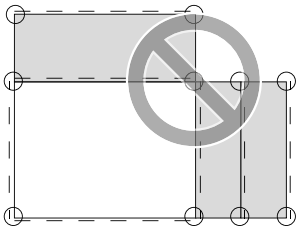

Fig. B2.01f

Dimensions

Minimum size of an individual tower: 1.00 x 1.00 m.

Grid dimensions for VSS:
between 0.25 m and 3.00 m in 25 cm increments.
Second dimension as for the respective base tower side.
(Fig. B2.01g)

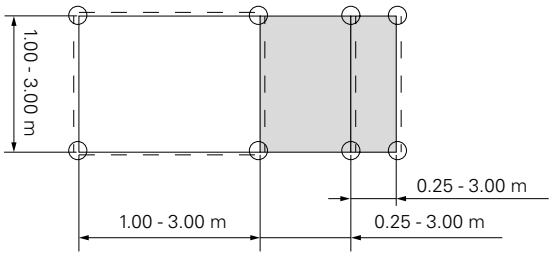

Fig. B2.01g

Brace arrangement

In the direction of the Additional Frames, additional braces are only required in the main tower.
Transverse to the direction of the Additional Frames, brace all frame columns of the main tower and the Additional Frames with braces.
(Fig. B2.02a + Fig. B2.02b)

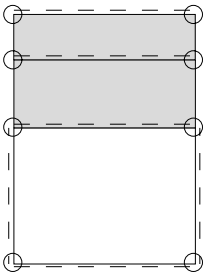

Fig. B2.02a

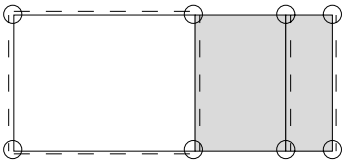

Fig. B2.02b

Key:
_ _ _ _ _ Braces

General information

The assembly process is the same as described in Section A1, PERI UP Flex Shoring Tower.

Assemble the shoring tower in such a way that the wider side (with Additional Frames) is lying flat on the ground. The tower is subsequently erected from this side.

Base Frame VSS

Components	Piece count
1 Base Spindle UJB	4x
2 Base Standard UVB 25	4x
4 Horizontal Ledger UH-2 150	2x
5 Horizontal Ledger UH-2 100	4x
13 Spindle Locking UJS	4x

(Fig. B2.03)

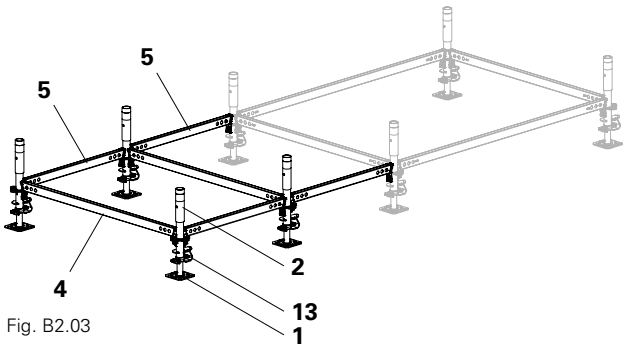

Fig. B2.03

Standards and Ledgers VSS

Components	Piece count
4 Horizontal Ledger UH-2 150	2x
5 Horizontal Ledger UH-2 100	4x
6 Standard UVR-2 200	4x
10 Ledger Brace UBL-2 150/150	2x
14 Pin Ø 48/57	4x

(Fig. B2.04)

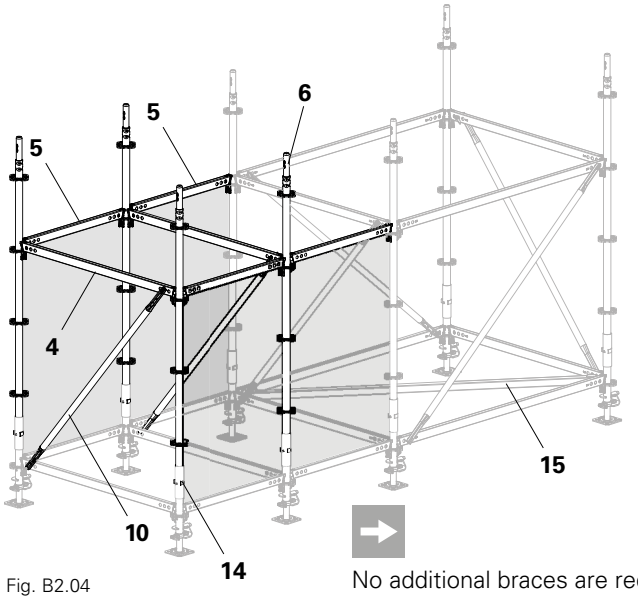

Fig. B2.04

No additional braces are required in the marked fields!

- Do not secure the horizontal ledgers with hammer blows until the ledger braces have been installed.
- As an alternative to the pins Ø 48/57, screws M10x70, 8.8 with 4x nuts M10 can always be used.

Height Units VSS

Standards

Components	Piece count
6 Standard UVR-2 200	4x
14 Pin Ø 48/57	4x

(Fig. B2.05)

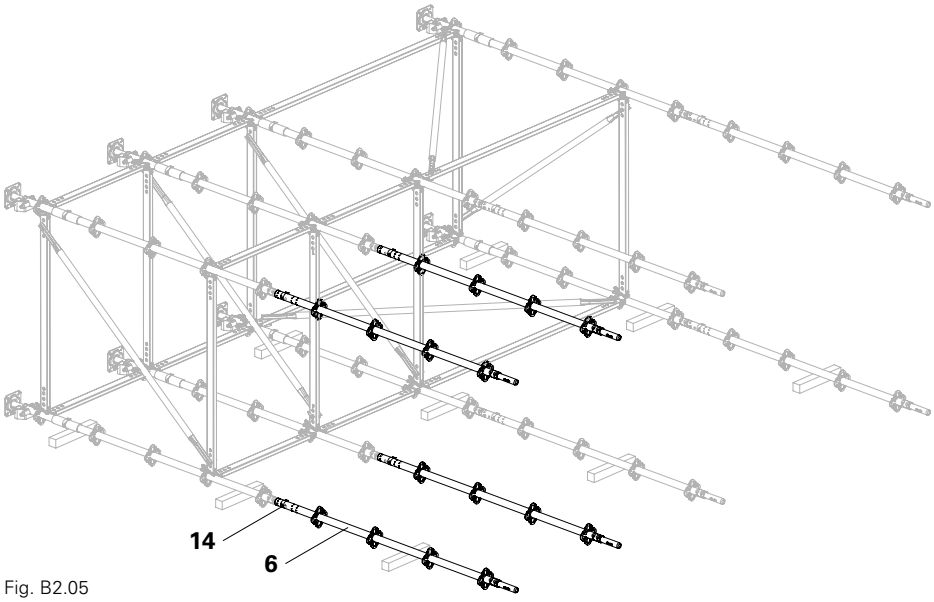

Fig. B2.05

Ledgers and Braces VSS

Components	Piece count
4 Horizontal Ledger UH-2 150	2x
5 Horizontal Ledger UH-2 100	4x
10 Ledger Brace UBL 150/150	2x

(Fig. B2.06)

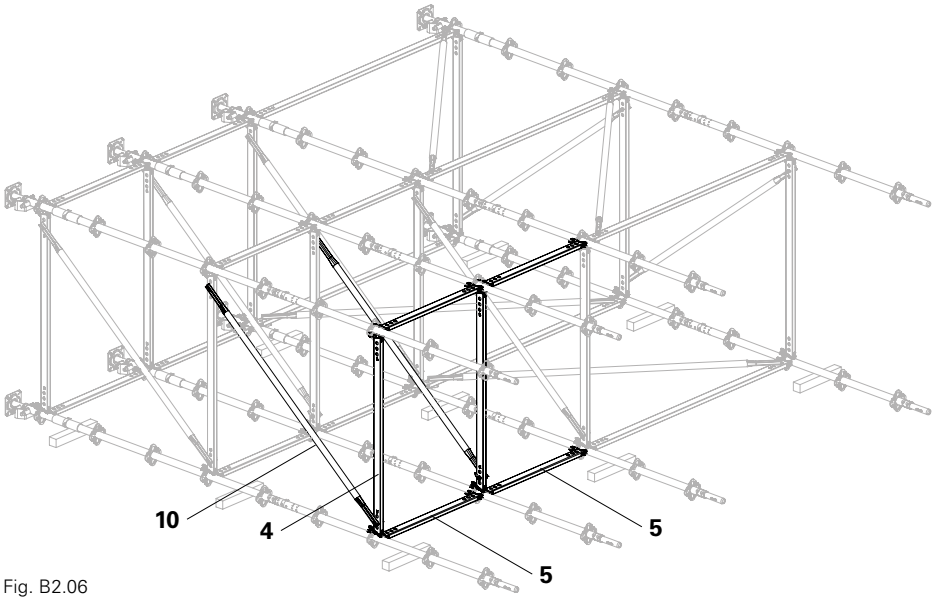

Fig. B2.06

Head Element with Height Adjustment VSS

Shown here in a vertical position due to didactical reasons!
The assembly example shows a height adjustment of 2.50 m (Fig. B2.07)

Components	Piece count
4 Horizontal Ledger UH-2 150	4x
5 Horizontal Ledger UH-2 100	8x
7 Top Standard UVH-2 150*	4x
9 Ledger Brace UBL-2 150/100*	2x
10 Ledger Brace UBL-2 150/150*	2x
14 Pin Ø 48/57	4x
18 Crosshead Spindle TR 38-70/50	4x
19 Head Spindle Locking UJB	4x

Height adjustment takes place through the use of corresponding top standards (heights 100 to 250 cm) and adjusting the spacing of the horizontal ledgers, see Section "Height design" on page 22.

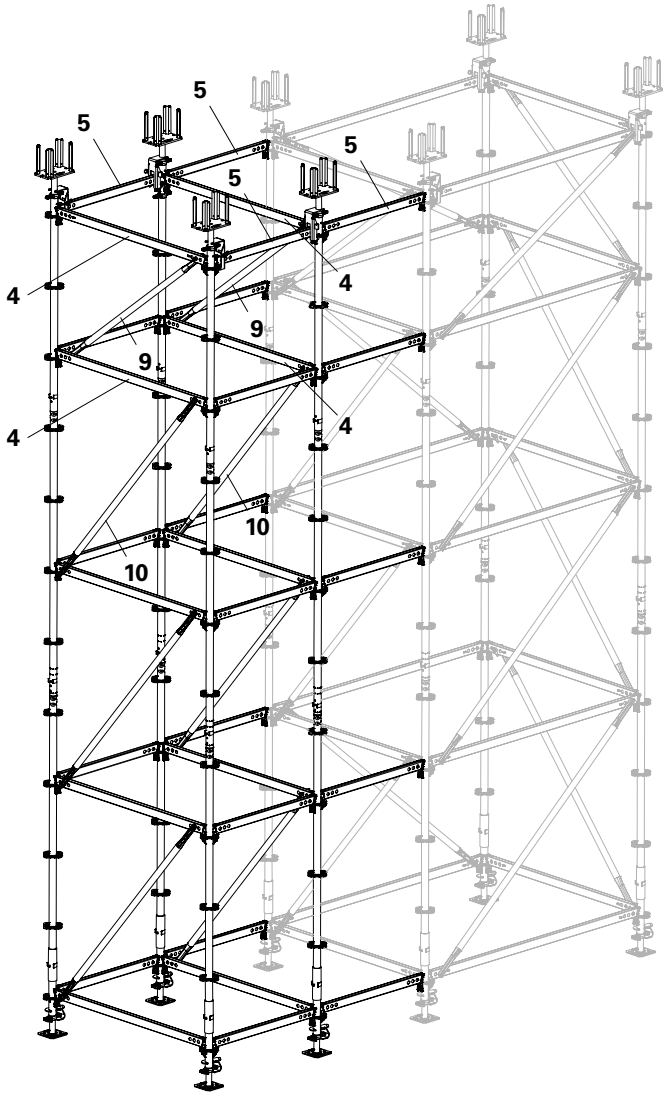

Fig. B2.07

Erection with the crane

- Ensure that all standards are tightly connected!
- Remove the lifting gear from a safe working position!
- Only attach to the rosett nodes that are directly connected to the horizontal ledgers!

Erection

1. Spindle the base spindles at the bottom all the way in to avoid overloading the components during erection.
2. Place four chains or textile lifting gear, e.g. round slings, around the bottom of the rosett node fitted with horizontal ledgers.
3. Erect the shoring tower.
4. Whilst suspended on the crane lifting gear, adjust the base spindles to the required height.

(Fig. B2.08 + Fig. B2.08a)

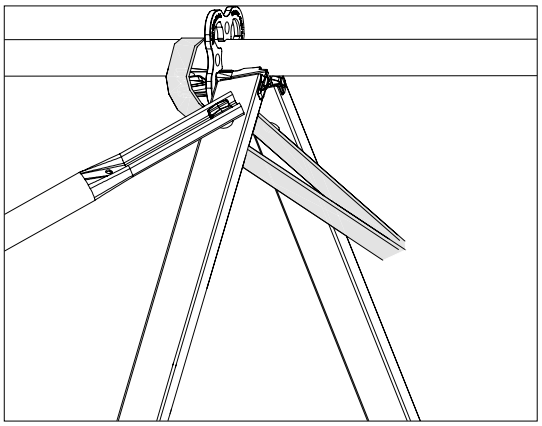

Fig. B2.08a

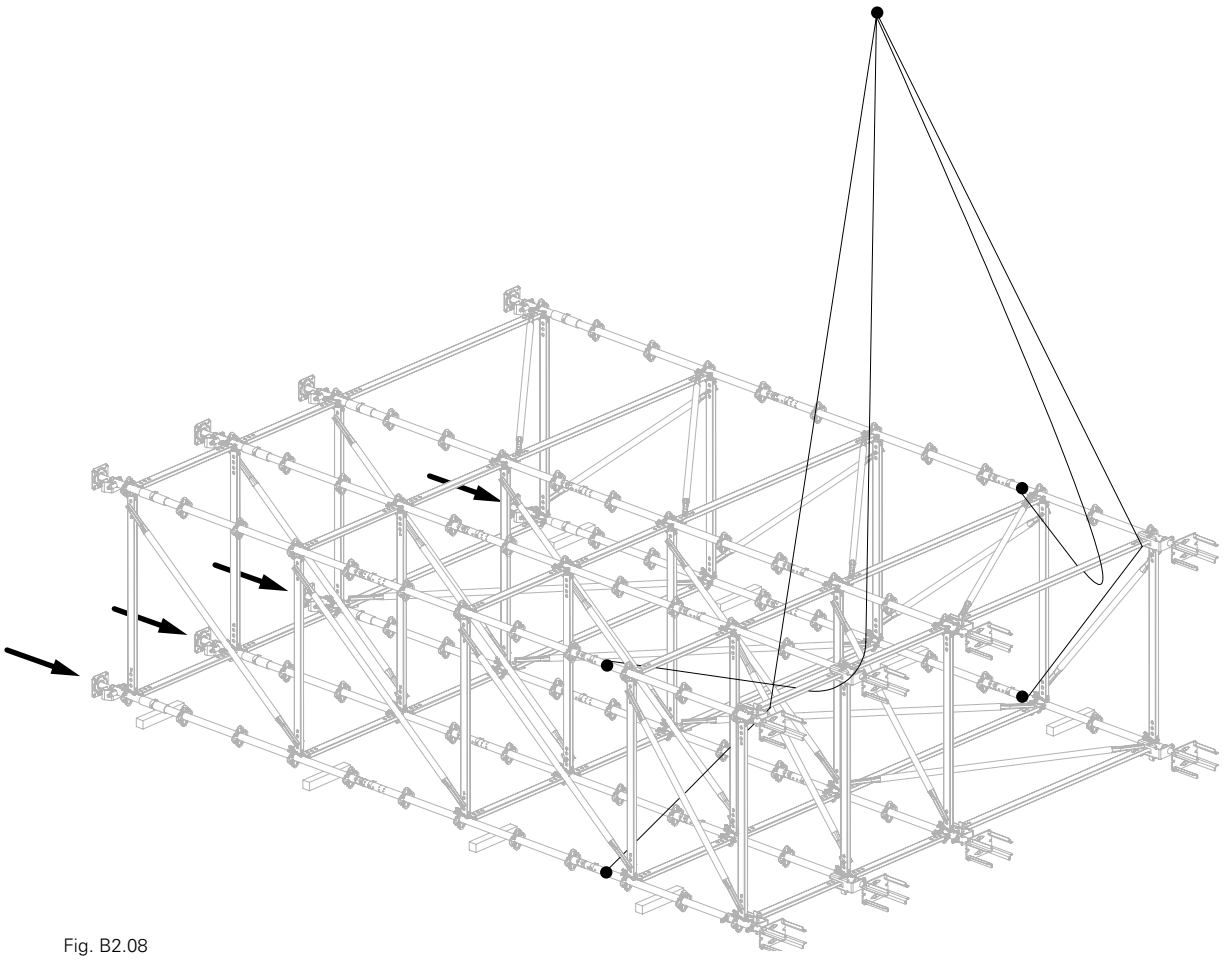

Fig. B2.08

Dismantling

- Ensure that all standards are tightly connected!
- Attach the lifting gear from a safe working position!
- Only attach to the rosett nodes that are directly connected to the horizontal ledgers!

1. Place four chains or textile lifting gear, e.g. round slings, around the bottom of the rosett node fitted with horizontal ledgers and attach to the crane.
2. Spindle the base spindles at the bottom all the way in to avoid overloading the components during the set-down process.
3. Using the wider side, position the tower on support timbers with the crane.
4. Dismantle the tower starting from the head side:
   – Remove the head spindles.
   – Dismantle each height unit in turn. First dismantle ledger braces and horizontal ledgers, then standards.
   – Dismantle the base unit.
5. Store components in a sorted manner, e.g. pallets.

(Fig. B2.09)

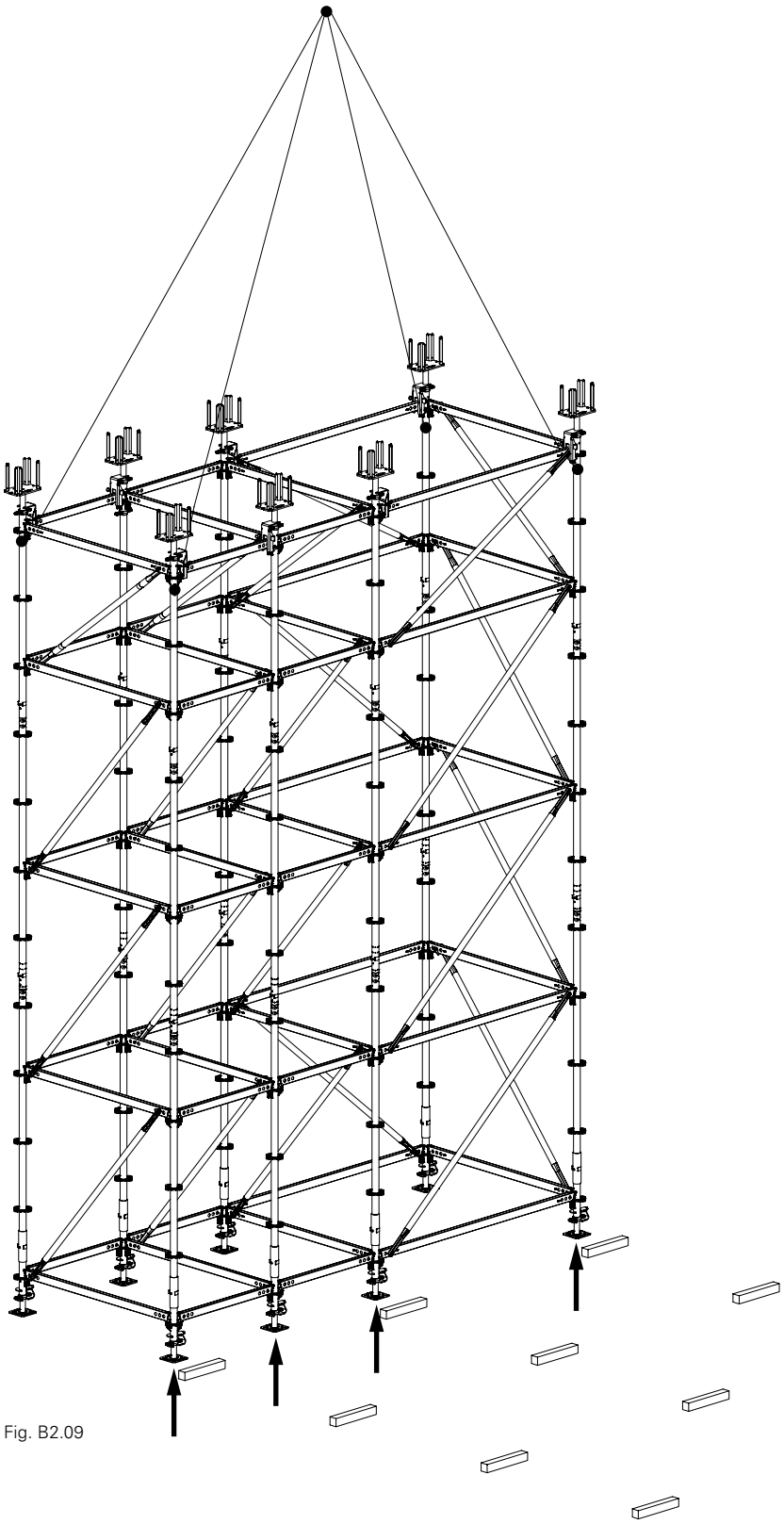

Fig. B2.09

Supporting individual towers

- To secure against tipping or horizontal movement, temporary support may be necessary during the installation process.
- Fit 3 push-pull props as an assembly aid.
- For high shoring towers, additional holders positioned at a higher level may be required.
- Alternatively, an appropriate holder can be used on existing components with sufficient load-bearing capacity.

Components	Piece count
40 Push-Pull Prop RS	3x
41 Brace Connector HDR	3x
42 Base Plate-3 F. RS 210-1400	3x
43 Tie Bolt PERI 14/20 x 130	3x

Take into consideration the data sheet for Tie Bolt PERI 14/20 x 130.

Preparation
Remove cotter pins (**41.2**) and bolts (**41.1**) from the brace connectors (**41**).

Assembly
1. Secure coupling (**41.3**) of the brace connector (**41**) to the standard of the shoring tower, and align. (Fig. B3.01a)
2. Fit the lug (**40.1**) on the push-pull prop (**40**) between the lugs of the brace connector.
3. Fix push-pull prop with bolts (**41.1**) and cotter pins (**41.2**) to the brace connector. (Fig. A4.01a)
4. Fix the base plate (**42**) to the ground using tie bolts (**43**).
   Inclination angle of the push-pull prop in relation to the ground approx. 60°. (Fig. B3.01b)
5. Fix push-pull prop (**40**) with bolts (**42.1**) and cotter pins (**42.2**) to the base plate (**42**). (Fig. B3.01b)

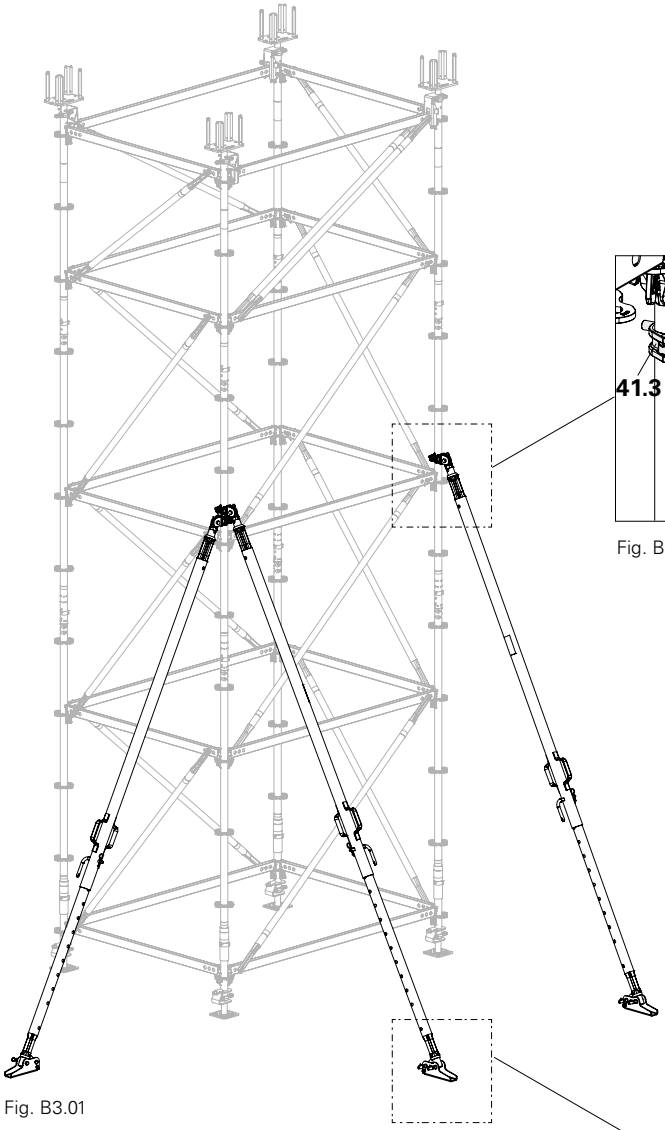

Fig. B3.01

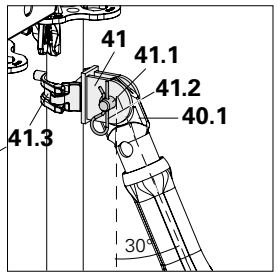

Fig. B3.01a

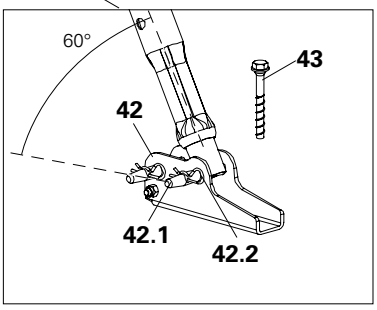

Fig. B3.01b

Bracing a set of shoring towers

Fit push-pull props and horizontal ledgers to provide stability.

Components

3 Horizontal Ledger UH-2
40 Push-Pull Prop RS
41 Brace Connector HDR
42 Base Plate RS
43 Tie Bolt PERI 14/20 x 130

Quantities according to the contractor's assembly instructions.

Assembly
Secure the first shoring tower to prevent tipping, see Section "Supporting individual towers" on page 30.
Connect additional shoring towers using horizontal ledgers (**3**) and push-pull props.
(Fig. B3.02)

Alternatively, the shoring towers can also be attached to existing structural elements, e.g. walls, in the assembly state to prevent them from falling over or shifting horizontally.

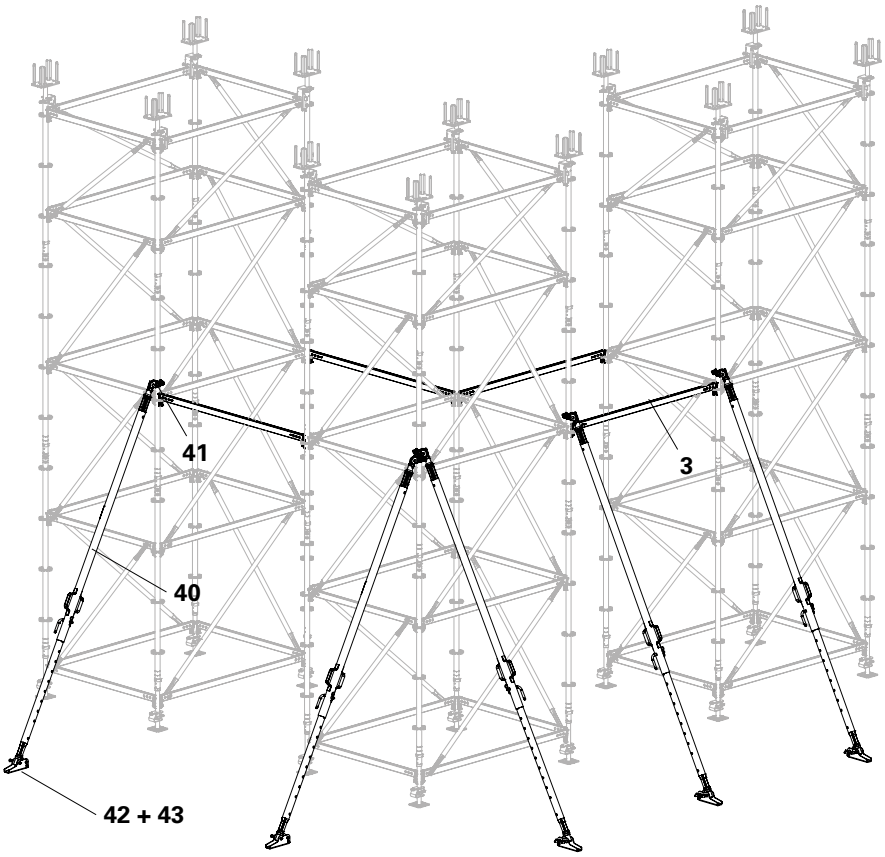

Fig. B3.02

Trolley with winch

The trolley with winch can be used for the PERI UP Flex Shoring Tower and PERI UP Flex Shoring Tower with VSS.

Components	Piece count
36 PERI UP Trolley	2x
37 Trolley with Winch	2x

Trolley with winch on PERI UP Flex Shoring Tower

Assembly

1. Fit the upper connectors of the trolley with winch at the respective middle (**36.1**) and bottom (**36.2**) holes. The top hole (**36.3**) remains free. (Fig. C1.01)
2. For improved installation, the ledger braces of the shoring tower should be moved inside.
3. Move the trolley with winch against the shoring tower and raise the lifting device with the winch. Make sure that
   – the bottom connector (**36.5**) engages with the rosett, (Fig. C1.02b)
   – whilst the top connector (**36.6**) is positioned under the Horizontal Ledger UH. (Fig. C1.02a)
   – The lifting device with locking bar (**36.4**) locks automatically.
4. Raise the lifting devices evenly until the dead weight of the shoring tower has been transferred to the trolley with winch and sufficient ground clearance has been achieved.

(Fig. C1.02)

- The tilt resistance of the shoring tower must be ensured.
  Ratio h/w < 3/1 or in accordance with separate verification.
- Observe the instructions for use for the trolley with winch!
- Raise and lower the tower evenly.

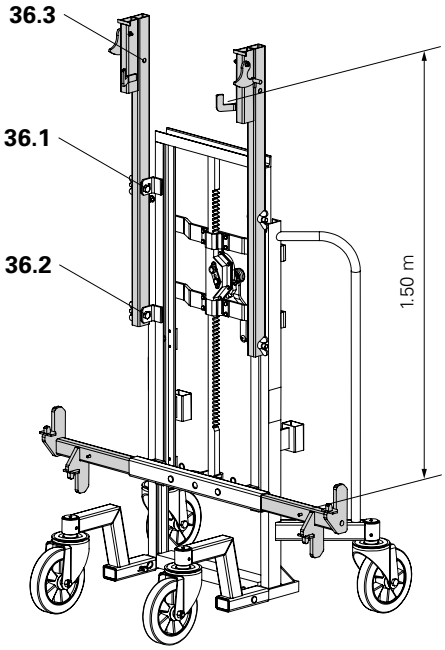

Fig. C1.01

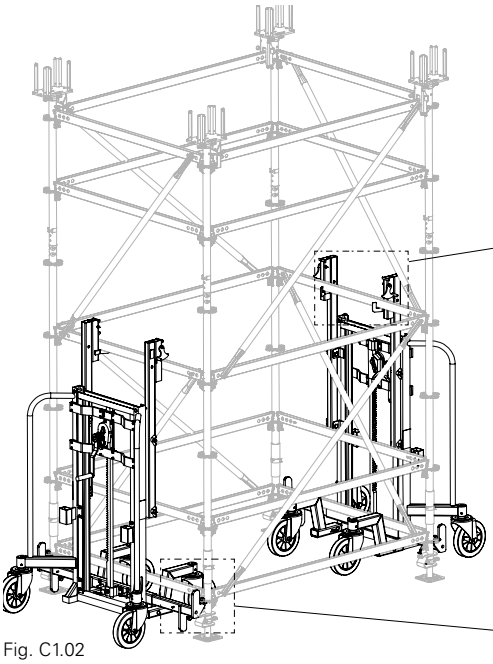

Fig. C1.02

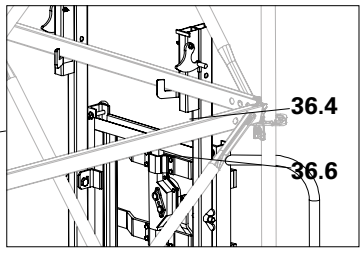

Fig. C1.02a

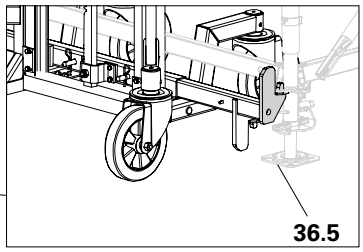

Fig. C1.02b

Trolley with winch on PERI UP Flex Shoring Tower with additional frame

Assembly takes place in the same way as for the PERI UP Flex Shoring Tower. For VSS with 25 cm, the following applies:

- For VSS with 25 cm spacing to the next frame, remove the bottom horizontal ledger of the second frame.
- Check the clearance to the ledger brace (**5**)! (Fig. C1.03a)
- After the moving procedure has finished, re-install the horizontal ledger!

Assembly
See the section Trolley with Winch on PERI UP Flex Shoring Tower.

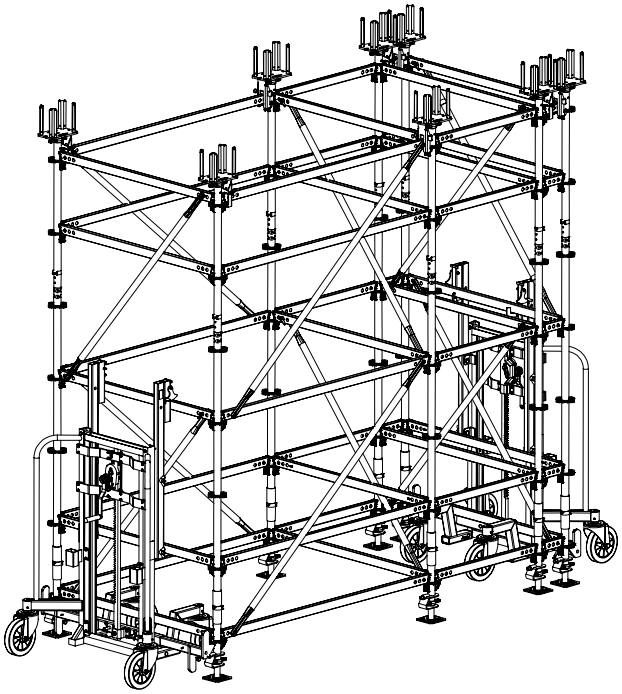

Fig. C1.03

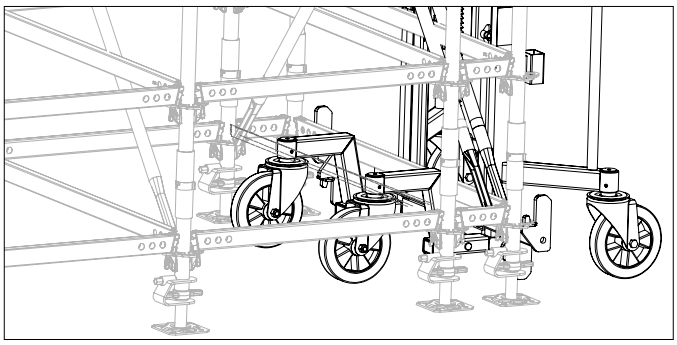

Fig. C1.03a

General information

The PERI UP Flex Shoring Tower can be adjusted to accommodate inclined erection areas or inclined slab decks.

The longer side of the shoring tower (arrow) must point in the direction of the inclination.

- All occurring horizontal forces must be safely transferred.
- Separate static proof is required for use on inclined erection areas or under inclined slabs.

The pegging holes to be used on the Connector MP SRU are determined by the angle of inclination.

Components

16 Ledger Brace UBL-2 150/50
53 Spindle Head SRU
54 Connector MP SRU
55 Filler pin Ø 21*120
56 Cotter pin 4/1
57 Sw Coupl. SW 38/48
58 Sw Coupl. SW 48/48
59 Scaffold Tube 48.3x3.2 mm 3 m galv

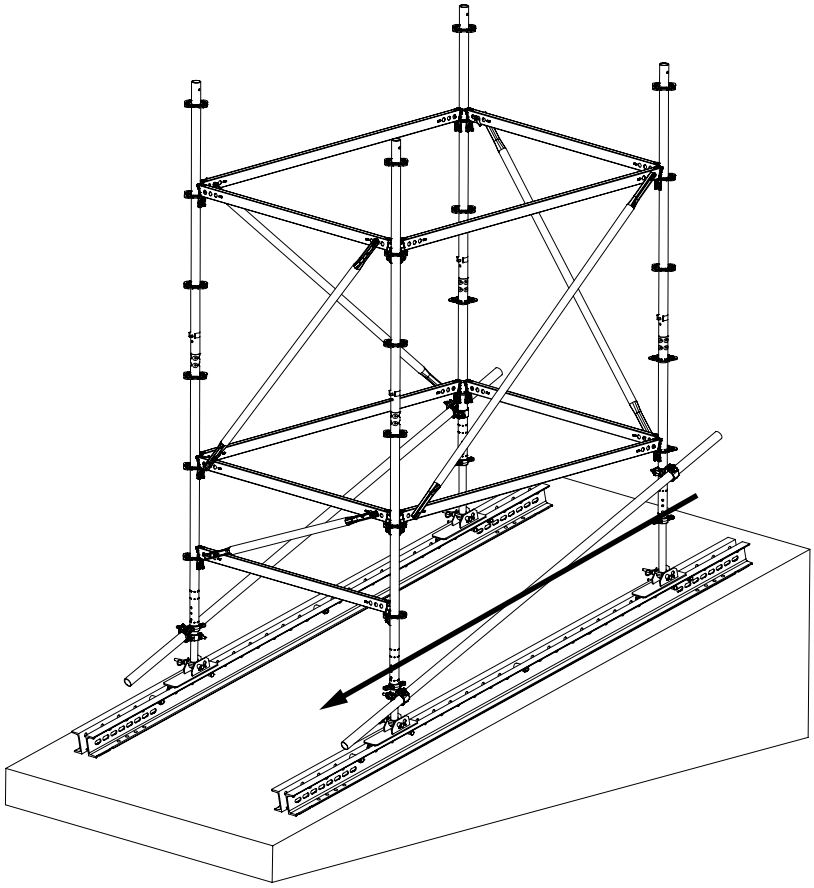

Fig. C2.01

Inclined erection surface

Preparation

1. Align the Steel Waler SRU (**52**) to accommodate the inclination. Secure the steel waler to prevent slipping, e.g. by anchoring into the substrate. (Fig. C2.02)

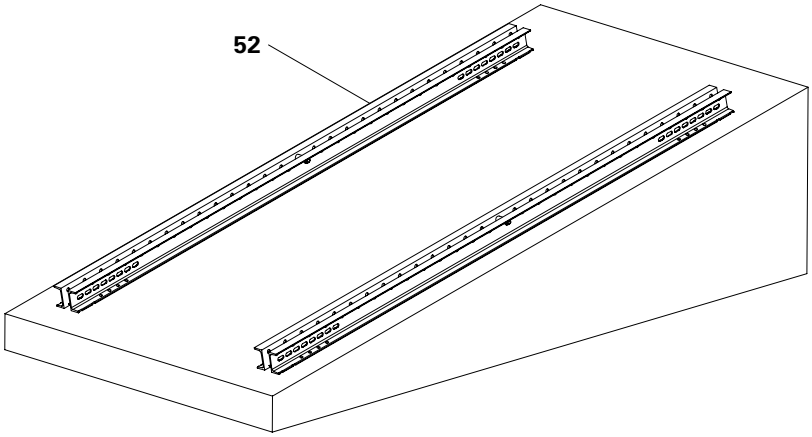

Fig. C2.02

Fitting the first frame

2. Fit the first Prop Adapter MP SRU (**54a**) on a Steel Waler SRU with filler pin (**55**) and cotter pin (**56**). (Fig. C2.03a)
3. Fit Spindle Head SRU (**53a**) on Connector MP SRU with filler pin (**55a**) and cotter pin (**56a**) as base spindles. (Fig. C2.03b)
4. Pre-assemble the second prop adapter (**54b**) with Spindle Head SRU (**53b**) and set it down loosely on the Steel Waler SRU.
5. Pre-assemble length-adjusted standards (**6a + 6b**) with horizontal ledgers (**3**) to form the base level of a longitudinal frame.
6. Fit the base level with standard (**6a**) onto the Spindle Head SRU (**53a**) first of all. Align the prop adapter (**54b**) and fit the second standard (**6b**) onto the spindle head (**53b**). (Fig. C2.03)
7. Fit the second prop adapter with a filler pin and cotter pin.

Fitting the second frame

1. Fit the second frame in the same way.
2. Connect both frames with horizontal ledgers (**4**).
3. Align the base level horizontally and hammer the wedges of the horizontal ledgers into place. (Fig. C2.04)

The Prop Adapter MP SRU is not always required in pairs. The Spindle Head SRU can be bolted in directly on one side if the Steel Ledgers SRU are aligned appropriately.

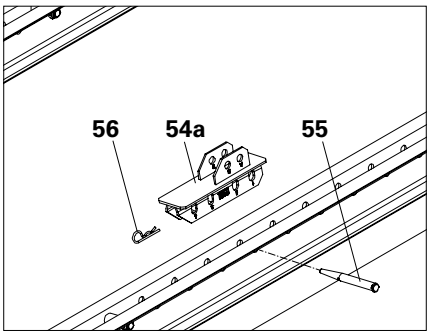

Fig. C2.03a

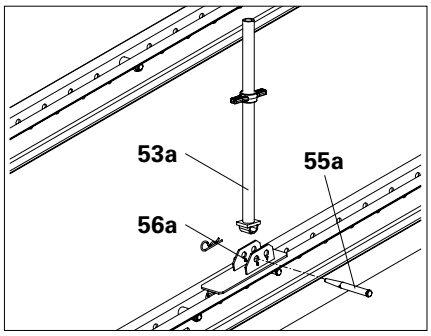

Fig. C2.03b

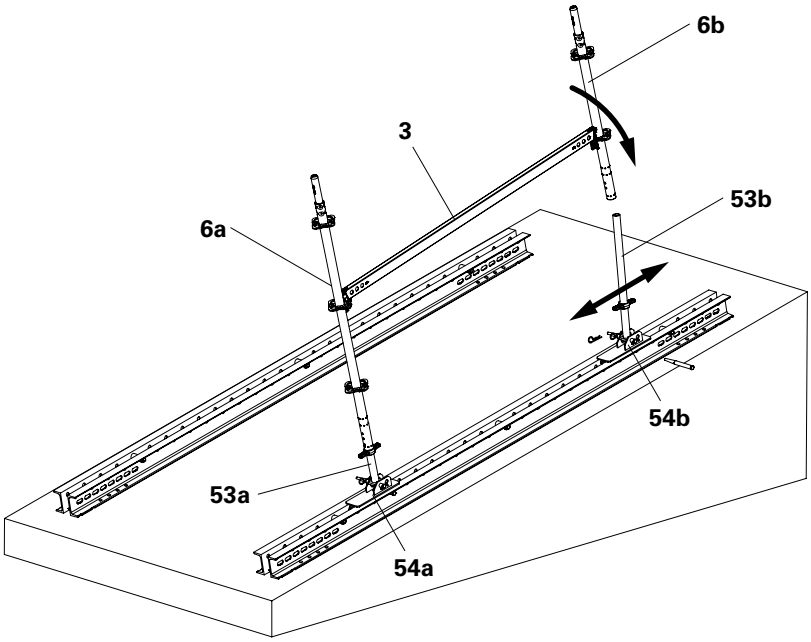

Fig. C2.03

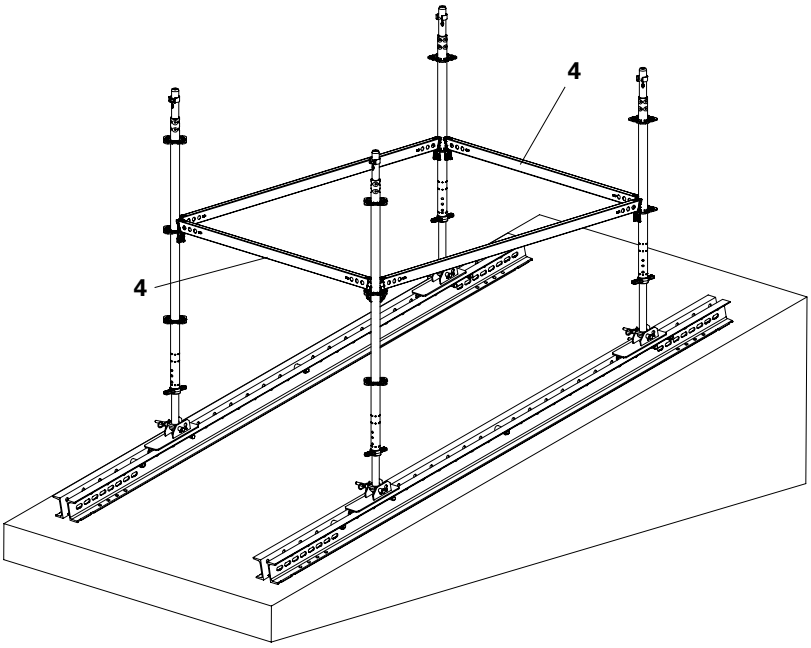

Fig. C2.04

Bracing the base level

Brace the longer shoring tower side diagonally between Spindle Head SRU and Standard UVR with scaffold tube (**59**):

1. Fit a Sw. Coupl. DK 38/48 (**57**) on the spindle head, as close as possible to the Connector MP SRU.
2. Fit a Sw. Coupl. DK 48/48 (**58**) on the standard, directly above the first rosett.
3. Fit the scaffold tube (**59**) into the couplings and tighten the couplings with 50 Nm.
4. Brace the side with longer standards using an additional horizontal ledger (**4**) and ledger brace (**16**). (Fig. C2.05)

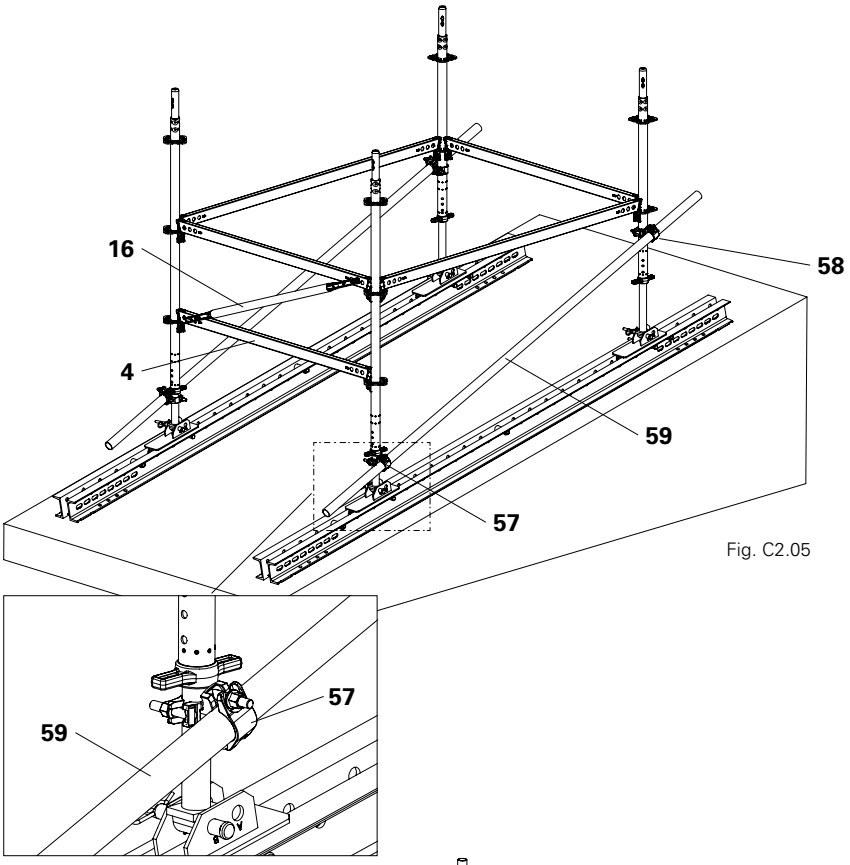

Fig. C2.05

Fig. C2.05a

Completing the shoring tower

1. Erection of the shoring tower continues in accordance with Section A1. (Fig. C2.06)

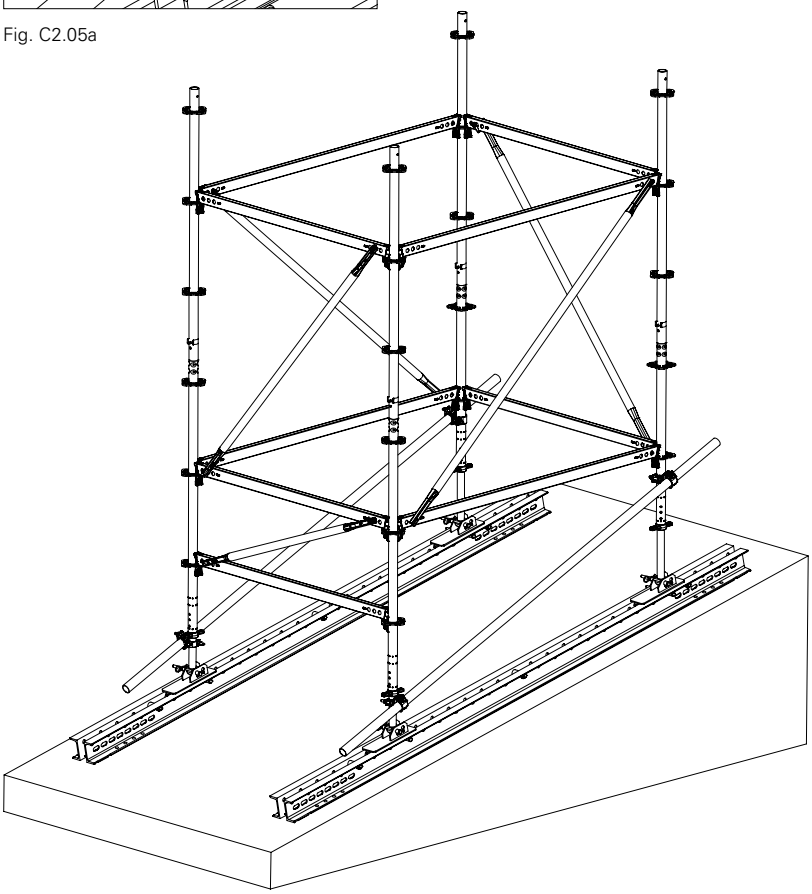

Fig. C2.06

Inclined slab deck

1. Assemble the shoring tower up to the head section in accordance with Section A1.
2. Set up length-adjusted top standards (**7**) and brace them at the uppermost rosett level with horizontal ledgers (**4**) and ledger braces (**16**).
3. Insert Spindle Head SRU (**53**) into the top standards as head spindles.
4. Brace the longer shoring tower side diagonally between Spindle Head SRU and Standard UVR-2 (**6**) with scaffold tube (**59**).
   – Fit a Sw. Coupl. DK 38/48 (**57**) on the spindle head, as close as possible to the Connector MP SRU.
   – Fit a Sw. Coupl. DK 48/48 (**58**) on the standard, directly above the first rosett.
5. Fit Connector MP SRU (**54**) on Spindle Head SRU using filler pins (**55**) and cotter pins (**56**).
6. Fit Connector MP SRU on Steel Waler SRU using a filler pin (**55a**). Secure the filler pin with a cotter pin (**56a**).
7. Safely transfer horizontal loads as directly as possible, e.g. via the bracing on the Steel Waler SRU.

(Fig. C2.07 – Fig. C2.07a)

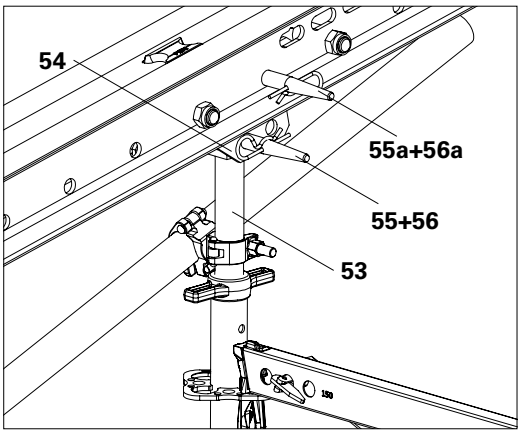

Fig. C2.07a

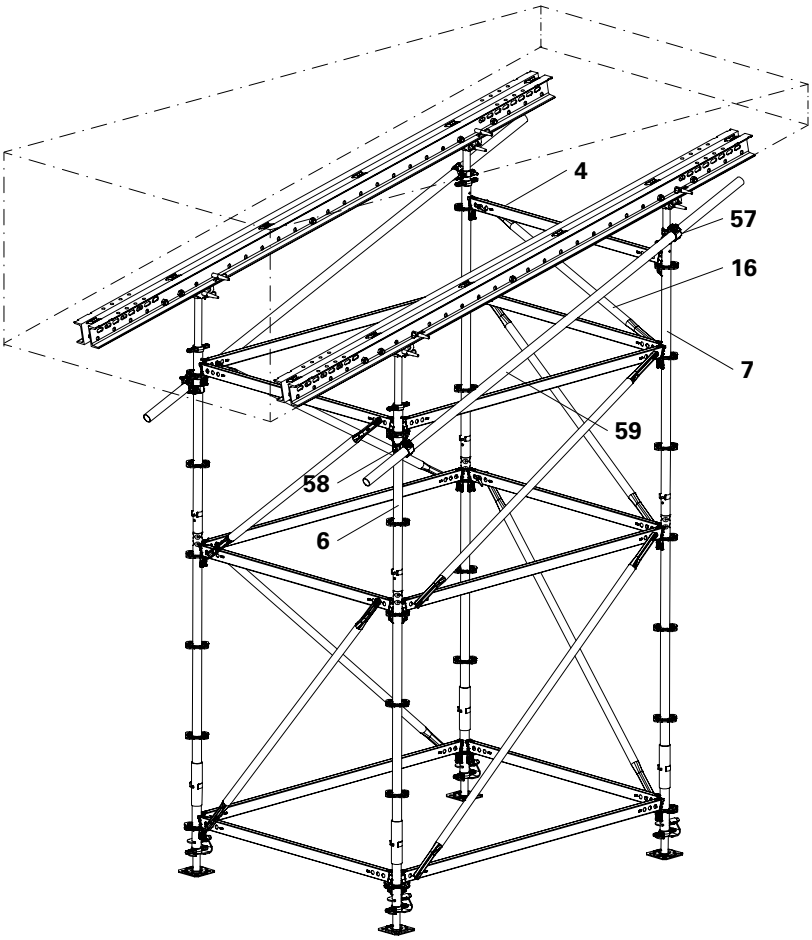

Fig. C2.07

- Refer to the user information for PERI pallets and stacking devices!
- Pallets and stacked items must be protected
  against the effects of the weather!
- Always attach the four-sling lifting gear using the four load-bearing points!

Transportation
PERI pallets and stacking devices are suitable for lifting by crane or forklift. They can also be moved with the PERI pallet lifting trolley.
All pallets and stacking devices can be lifted using both the longitudinal and front sides.
The following are just some examples.

Pallet RP-2 80 x 120
(Fig. D1.01)
Pallet RP-2 80 x 150
(Fig. D1.02)

Load-bearing capacity = 1.5 t.
Crane sling angle ≤ 15° from the vertical.
Stacking height: 4 pallets on top of each other.

Filling examples

Pallet RP-2 80 x 120

3	Horizontal Ledger UH-2 200	108
9	Ledger Brace UBL-2 150/100	225

(Fig. D1.03)

Pallet RP-2 80 x 150

6	Standard UVR-2 200	56
3	Horizontal Ledger UH-2 200	48
11	Ledger Brace UBL-2 200/100	48

(Fig. D1.04)

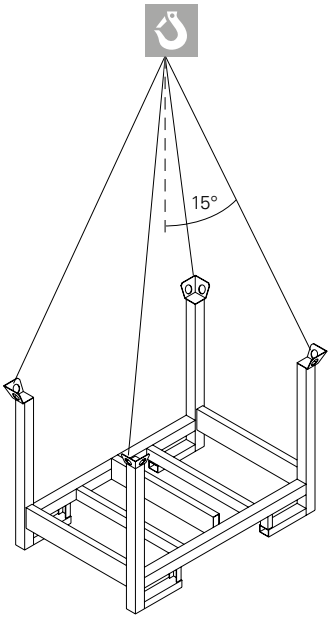

Fig. D1.01

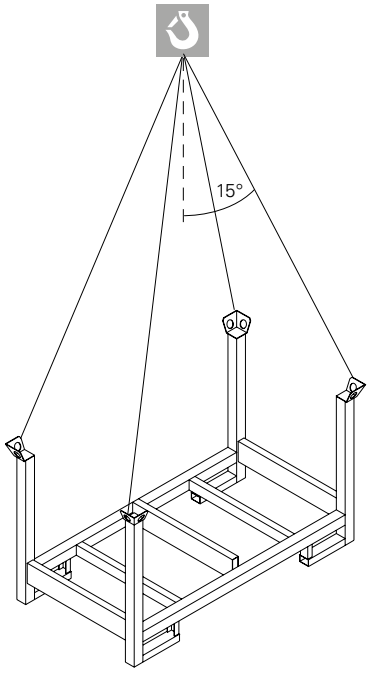

Fig. D1.02

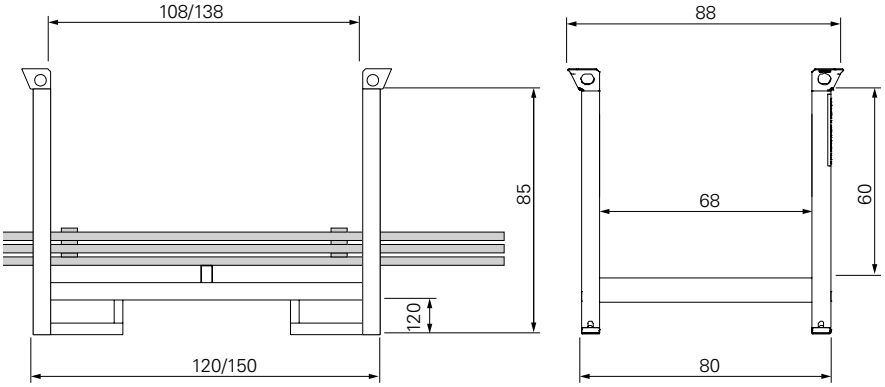

Fig. D1.02a

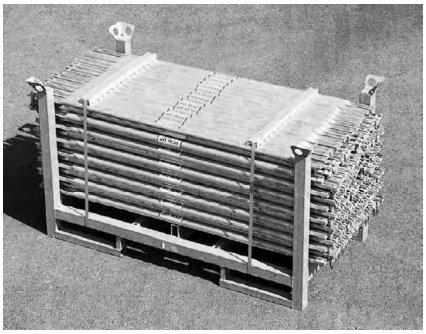
Fig. D1.03

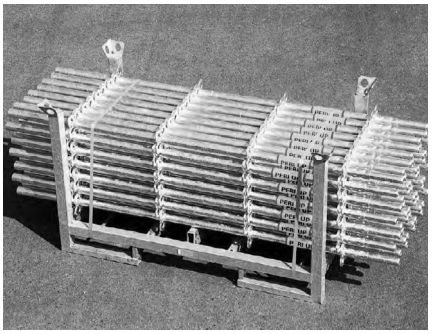
Fig. D1.04

- Always attach the four-sling lifting gear using the four load-bearing points!
- Before transport, close and lock the flap and, if necessary, secure the cover!

Crate pallet 80 x 120
(Fig. D1.05 + Fig. D1.05a)

Load-bearing capacity = 1.5 t.
Crane sling angle ≤ 15°.
Stacking height: 3 crate pallets on top of each other.

Filling examples

Pallet RP-2 80 x 120

18	Crosshead Spindle TR 38-70/50	40
1	Base Spindle UJB 38-50/30	200

(Fig. D1.06)

- For better loading and unloading, the flap (**52**) can be pivoted downwards.
- For securing the load against theft, there is the option of fitting the crate pallet with a lid.

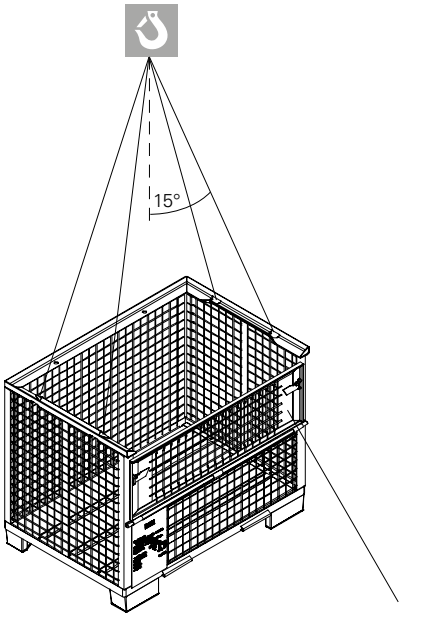

Fig. D1.05

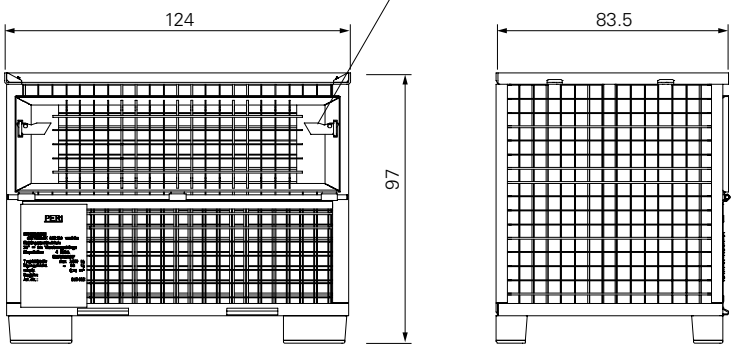

Fig. D1.05a

Fig. D1.06

E1 Shoring tower, restrained at the top

PERI

without additional ledger

Permissible leg load FV [kN]											
		Ground plan									
Side lengthways to the wind		1.0 m					1.5 m				
Side perpendicular to the wind		1.0 m	1.5 m	2.0 m	2.5 m	3.0 m	1.0 m	1.5 m	2.0 m	2.5 m	3.0 m
Height [m] from	to										
1.83	8.39	33.3	32.7	32.2	31.7	31.2	33.2	32.8	32.3	31.8	31.4
8.33	8.89	33.1	32.5	31.9	31.4	30.9	33.1	32.6	32.1	31.6	31.2
8.83	9.39	32.9	32.2	31.7	31.1	30.5	33.0	32.4	31.9	31.4	30.9
9.33	9.89	32.7	32.0	31.4	30.8	30.2	32.8	32.2	31.7	31.2	30.7
9.83	10.39	32.5	31.8	31.1	30.5	29.8	32.7	32.1	31.5	30.9	30.4
10.33	10.89	32.3	31.6	30.8	30.1	29.5	32.5	31.9	31.3	30.7	30.2
10.83	11.39	32.1	31.3	30.6	29.8	29.1	32.4	31.7	31.1	30.5	29.9
11.33	11.89	31.9	31.1	30.3	29.5	28.8	32.2	31.6	30.9	30.3	29.7
11.83	12.39	31.7	30.9	30.0	29.2	28.4	32.1	31.4	30.7	30.1	29.4
12.33	12.89	31.6	30.6	29.7	28.9	28.1	32.0	31.2	30.5	29.8	29.2
12.83	13.39	31.4	30.4	29.5	28.6	27.7	31.8	31.0	30.3	29.6	28.9
13.33	13.89	31.2	30.2	29.2	28.3	27.4	31.7	30.9	30.1	29.4	28.7
13.83	14.39	31.0	29.9	28.9	28.0	27.0	31.5	30.7	29.9	29.2	28.4
14.33	14.89	30.8	29.7	28.7	27.7	26.7	31.4	30.5	29.7	28.9	28.2
14.83	15.39	30.6	29.5	28.4	27.4	26.3	31.2	30.4	29.5	28.7	27.9
15.33	15.89	30.4	29.2	28.1	27.1	26.0	31.1	30.2	29.3	28.5	27.7
15.83	16.39	30.1	28.9	27.7	26.6	25.5	30.9	29.9	29.0	28.1	27.3
16.33	16.89	29.8	28.5	27.3	26.1	25.0	30.6	29.6	28.7	27.8	26.9
16.83	17.39	29.5	28.2	26.9	25.7	24.5	30.4	29.3	28.3	27.4	26.4
17.33	17.89	29.2	27.8	26.5	25.2	24.0	30.2	29.1	28.0	27.0	26.0
17.83	18.39	28.9	27.5	26.1	24.8	23.5	29.9	28.8	27.7	26.6	25.6
18.33	18.89	28.6	27.1	25.7	24.3	23.0	29.7	28.5	27.4	26.3	25.2
18.83	19.39	28.0	26.4	24.8	23.3	21.8	29.4	28.1	26.9	25.7	24.5
19.33	19.89	27.4	25.6	23.9	22.3	20.6	29.0	27.6	26.3	25.1	23.8
19.83	20.39	26.8	24.8	23.0	21.2	19.5	28.7	27.2	25.8	24.5	23.2
20.33	20.89	26.2	24.1	22.1	20.2	18.3	28.3	26.8	25.3	23.9	22.5
20.83	21.39	25.6	23.3	21.2	19.1	17.1	28.0	26.3	24.8	23.3	21.8
21.33	21.89	25.0	22.6	20.3	18.1	15.9	27.7	25.9	24.3	22.7	21.1

Permissible leg loads with wind
See table for the leg loads for each individual leg.
Note the wind direction in the table!

Permissible leg loads without wind
When there is no wind flow, a simplified value of **33.0 kN** per individual leg can be used for all ground plans and heights. For slightly more favourable values, see the Type test.

Operating conditions
- restrained at the top
- without additional ledgers in top and bottom sections
- Horizontal bulkhead every 9 m at least
- Pivoting Head Spindle or Crosshead Spindle
- Spindle extension at bottom 30 cm, at top 35 cm
- Dynamic pressure throughout q = 0.5 kN/m²

E1 Shoring tower, restrained at the top

2.0 m					2.5 m					3.0 m				
1.0 m	1.5 m	2.0 m	2.5 m	3.0 m	1.0 m	1.5 m	2.0 m	2.5 m	3.0 m	1.0 m	1.5 m	2.0 m	2.5 m	3.0 m
33.3	32.8	32.4	32.0	31.6	32.8	32.4	32.0	31.6	31.2	32.4	32.0	31.6	31.2	30.8
33.2	32.7	32.3	31.9	31.5	32.7	32.3	31.9	31.4	31.1	32.3	31.9	31.5	31.1	30.7
33.1	32.6	32.2	31.7	31.3	32.6	32.2	31.7	31.3	30.9	32.2	31.8	31.3	30.9	30.5
33.0	32.5	32.0	31.6	31.2	32.5	32.0	31.6	31.2	30.7	32.1	31.6	31.2	30.8	30.3
32.9	32.4	31.9	31.5	31.0	32.4	31.9	31.5	31.0	30.6	32.0	31.5	31.0	30.6	30.2
32.8	32.3	31.8	31.3	30.9	32.3	31.8	31.3	30.9	30.4	31.9	31.4	30.9	30.5	30.0
32.7	32.2	31.7	31.2	30.7	32.2	31.7	31.2	30.7	30.3	31.7	31.2	30.8	30.3	29.8
32.6	32.1	31.6	31.1	30.6	32.1	31.6	31.1	30.6	30.1	31.6	31.1	30.6	30.1	29.7
32.5	32.0	31.4	30.9	30.4	32.0	31.4	30.9	30.4	30.0	31.5	31.0	30.5	30.0	29.5
32.4	31.8	31.3	30.8	30.3	31.9	31.3	30.8	30.3	29.8	31.4	30.8	30.3	29.8	29.3
32.3	31.7	31.2	30.7	30.1	31.8	31.2	30.7	30.2	29.6	31.3	30.7	30.2	29.7	29.1
32.2	31.6	31.1	30.5	30.0	31.7	31.1	30.5	30.0	29.5	31.1	30.6	30.0	29.5	29.0
32.1	31.5	30.9	30.4	29.8	31.6	31.0	30.4	29.9	29.3	31.0	30.4	29.9	29.4	28.8
32.0	31.4	30.8	30.3	29.7	31.5	30.9	30.3	29.7	29.2	30.9	30.3	29.7	29.2	28.6
31.9	31.3	30.7	30.1	29.5	31.4	30.7	30.2	29.6	29.0	30.8	30.2	29.6	29.1	28.5
31.8	31.2	30.6	30.0	29.4	31.3	30.6	30.0	29.4	28.8	30.7	30.0	29.5	28.9	28.3
31.7	31.0	30.3	29.7	29.1	31.1	30.4	29.8	29.2	28.6	30.5	29.9	29.3	28.7	28.1
31.5	30.8	30.1	29.4	28.7	31.0	30.2	29.6	28.9	28.3	30.4	29.7	29.1	28.4	27.8
31.4	30.6	29.8	29.1	28.4	30.8	30.1	29.3	28.7	28.0	30.3	29.5	28.9	28.2	27.5
31.2	30.4	29.6	28.8	28.1	30.7	29.9	29.1	28.4	27.7	30.1	29.4	28.7	28.0	27.3
31.0	30.2	29.3	28.5	27.8	30.5	29.7	28.9	28.1	27.4	30.0	29.2	28.5	27.7	27.0
30.9	30.0	29.1	28.2	27.4	30.4	29.5	28.7	27.9	27.1	29.9	29.0	28.3	27.5	26.8
30.8	29.8	28.9	28.1	27.2	30.3	29.3	28.5	27.6	26.8	29.7	28.8	28.0	27.2	26.4
30.7	29.7	28.8	27.9	27.1	30.1	29.2	28.3	27.4	26.6	29.5	28.6	27.8	26.9	26.1
30.6	29.6	28.7	27.8	26.9	30.0	29.0	28.1	27.2	26.3	29.4	28.4	27.5	26.7	25.8
30.5	29.5	28.5	27.6	26.7	29.8	28.8	27.9	27.0	26.1	29.2	28.2	27.3	26.4	25.5
30.4	29.3	28.4	27.4	26.5	29.7	28.7	27.7	26.8	25.8	29.0	28.0	27.0	26.1	25.2
30.2	29.2	28.2	27.3	26.3	29.6	28.5	27.5	26.5	25.6	28.8	27.8	26.8	25.8	24.8

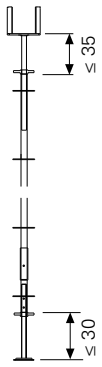

Pivoting Head Spindle or Cross-head Spindle
TR 38 – 70 / 50

Base Spindle
UJB 38 – 50 / 30

Ground plan

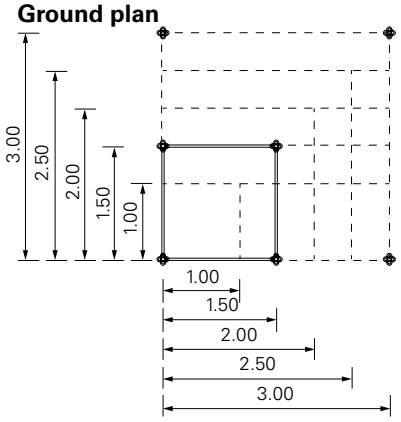

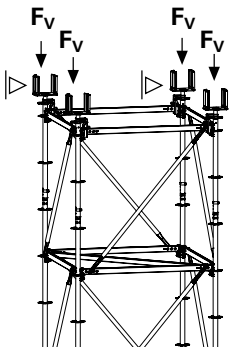

E1 Shoring tower, restrained at the top

PERI

with additional ledger

Permissible leg load FV [kN]											
		Ground plan									
Side lengthways to the wind		1.0 m					1.5 m				
Side perpendicular to the wind		1.0 m	1.5 m	2.0 m	2.5 m	3.0 m	1.0 m	1.5 m	2.0 m	2.5 m	3.0 m
Height [m] from	to										
1.83	8.39	36.0	35.7	35.3	35.0	34.7	36.8	36.3	35.9	35.4	35.0
8.33	8.89	35.9	35.5	35.1	34.7	34.3	36.6	36.1	35.6	35.2	34.7
8.83	9.39	35.7	35.3	34.8	34.4	34.0	36.5	35.9	35.4	34.9	34.5
9.33	9.89	35.6	35.1	34.6	34.2	33.7	36.3	35.7	35.2	34.7	34.2
9.83	10.39	35.4	34.9	34.4	33.9	33.4	36.2	35.5	35.0	34.4	33.9
10.33	10.89	35.2	34.7	34.1	33.6	33.1	36.0	35.4	34.7	34.2	33.6
10.83	11.39	35.1	34.5	33.9	33.3	32.7	35.8	35.2	34.5	33.9	33.3
11.33	11.89	34.9	34.3	33.6	33.0	32.4	35.7	35.0	34.3	33.7	33.0
11.83	12.39	34.8	34.1	33.4	32.7	32.1	35.5	34.8	34.1	33.4	32.7
12.33	12.89	34.6	33.9	33.1	32.5	31.8	35.4	34.6	33.9	33.1	32.4
12.83	13.39	34.5	33.7	32.9	32.2	31.5	35.2	34.4	33.6	32.9	32.2
13.33	13.89	34.3	33.5	32.7	31.9	31.2	35.1	34.2	33.4	32.6	31.9
13.83	14.39	34.1	33.3	32.4	31.6	30.8	34.9	34.0	33.2	32.4	31.6
14.33	14.89	34.0	33.1	32.2	31.3	30.5	34.7	33.8	33.0	32.1	31.3
14.83	15.39	33.8	32.9	31.9	31.1	30.2	34.6	33.6	32.7	31.9	31.0
15.33	15.89	33.7	32.7	31.7	30.8	29.9	34.4	33.4	32.5	31.6	30.7
15.83	16.39	33.4	32.4	31.3	30.4	29.4	34.2	33.2	32.2	31.2	30.3
16.33	16.89	33.2	32.1	31.0	30.0	28.9	34.0	32.9	31.8	30.8	29.9
16.83	17.39	33.0	31.8	30.6	29.5	28.5	33.7	32.6	31.5	30.5	29.4
17.33	17.89	32.7	31.5	30.3	29.1	28.0	33.5	32.3	31.2	30.1	29.0
17.83	18.39	32.5	31.2	29.9	28.7	27.5	33.3	32.0	30.8	29.7	28.6
18.33	18.89	32.2	30.9	29.6	28.3	27.1	33.0	31.7	30.5	29.3	28.1
18.83	19.39	31.7	30.2	28.8	27.4	26.0	32.7	31.3	30.0	28.8	27.5
19.33	19.89	31.2	29.5	28.0	26.5	25.0	32.4	30.9	29.5	28.2	26.9
19.83	20.39	30.6	28.8	27.2	25.5	23.9	32.1	30.5	29.1	27.7	26.3
20.33	20.89	30.1	28.2	26.4	24.6	22.9	31.7	30.1	28.6	27.1	25.6
20.83	21.39	29.6	27.5	25.6	23.7	21.8	31.4	29.7	28.1	26.6	25.0
21.33	21.89	29.0	26.8	24.8	22.8	20.8	31.1	29.3	27.6	26.0	24.4

Permissible leg loads with wind
See table for the leg loads for each individual leg.
Note the wind direction in the table!

Permissible leg loads without wind
When there is no wind flow, a simplified value of **37.5 kN** per individual leg can be used for all ground plans and heights. For slightly more favourable values, see the Type test.

Operating conditions
- restrained at the top
- with additional ledgers in top and bottom sections
- Horizontal bulkhead every 9 m at least
- Pivoting Head Spindle or Crosshead Spindle
- Spindle extension at bottom 30 cm, at top 35 cm
- Dynamic pressure throughout q = 0.5 kN/m²

E1 Shoring tower, restrained at the top

2.0 m					2.5 m					3.0 m				
1.0 m	1.5 m	2.0 m	2.5 m	3.0 m	1.0 m	1.5 m	2.0 m	2.5 m	3.0 m	1.0 m	1.5 m	2.0 m	2.5 m	3.0 m
37.6	37.0	36.4	35.9	35.4	37.4	36.9	36.4	35.9	35.5	37.2	36.8	36.3	35.9	35.6
37.4	36.8	36.2	35.7	35.1	37.2	36.7	36.2	35.7	35.2	37.0	36.5	36.1	35.7	35.3
37.3	36.6	36.0	35.5	34.9	37.1	36.5	35.9	35.4	34.9	36.8	36.3	35.9	35.4	35.0
37.1	36.4	35.8	35.2	34.6	36.9	36.3	35.7	35.2	34.6	36.6	36.1	35.6	35.1	34.7
36.9	36.3	35.6	35.0	34.4	36.7	36.1	35.5	34.9	34.4	36.4	35.9	35.4	34.9	34.4
36.8	36.1	35.4	34.8	34.1	36.5	35.9	35.3	34.7	34.1	36.2	35.7	35.1	34.6	34.1
36.6	35.9	35.2	34.5	33.9	36.3	35.7	35.0	34.4	33.8	36.0	35.4	34.9	34.3	33.8
36.5	35.7	35.0	34.3	33.6	36.2	35.5	34.8	34.2	33.5	35.9	35.2	34.6	34.0	33.5
36.3	35.5	34.8	34.1	33.4	36.0	35.3	34.6	33.9	33.3	35.7	35.0	34.4	33.8	33.2
36.1	35.3	34.6	33.8	33.1	35.8	35.0	34.3	33.7	33.0	35.5	34.8	34.1	33.5	32.9
36.0	35.1	34.4	33.6	32.8	35.6	34.8	34.1	33.4	32.7	35.3	34.6	33.9	33.2	32.6
35.8	35.0	34.2	33.4	32.6	35.4	34.6	33.9	33.2	32.4	35.1	34.3	33.6	33.0	32.3
35.7	34.8	34.0	33.2	32.3	35.3	34.4	33.6	32.9	32.2	34.9	34.1	33.4	32.7	32.0
35.5	34.6	33.7	32.9	32.1	35.1	34.2	33.4	32.6	31.9	34.7	33.9	33.1	32.4	31.7
35.4	34.4	33.5	32.7	31.8	34.9	34.0	33.2	32.4	31.6	34.5	33.7	32.9	32.2	31.4
35.2	34.2	33.3	32.5	31.6	34.7	33.8	33.0	32.1	31.3	34.3	33.4	32.7	31.9	31.1
35.0	34.0	33.0	32.1	31.2	34.5	33.5	32.6	31.8	30.9	34.0	33.1	32.3	31.5	30.6
34.8	33.7	32.7	31.7	30.8	34.2	33.2	32.3	31.4	30.5	33.8	32.8	31.9	31.0	30.2
34.5	33.4	32.4	31.4	30.4	34.0	32.9	31.9	31.0	30.0	33.5	32.5	31.5	30.6	29.7
34.3	33.2	32.1	31.0	30.0	33.8	32.7	31.6	30.6	29.6	33.2	32.2	31.2	30.2	29.2
34.1	32.9	31.8	30.7	29.6	33.5	32.4	31.3	30.2	29.2	33.0	31.9	30.8	29.8	28.8
33.9	32.6	31.5	30.3	29.2	33.3	32.1	30.9	29.8	28.7	32.7	31.5	30.4	29.3	28.3
33.8	32.5	31.3	30.1	29.0	33.2	31.9	30.8	29.6	28.5	32.6	31.4	30.2	29.1	28.1
33.6	32.3	31.1	30.0	28.8	33.1	31.8	30.6	29.4	28.3	32.5	31.2	30.1	28.9	27.8
33.5	32.2	31.0	29.8	28.6	33.0	31.7	30.4	29.2	28.1	32.4	31.1	29.9	28.7	27.6
33.4	32.1	30.8	29.6	28.4	32.9	31.5	30.3	29.0	27.9	32.3	30.9	29.7	28.5	27.4
33.3	31.9	30.6	29.4	28.2	32.7	31.4	30.1	28.8	27.6	32.1	30.8	29.5	28.3	27.1
33.2	31.8	30.5	29.2	28.0	32.6	31.2	29.9	28.6	27.4	32.0	30.7	29.4	28.1	26.9

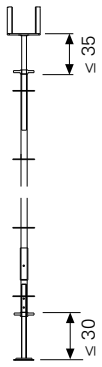

Pivoting Head Spindle or
Crosshead Spindle
TR 38 – 70 / 50

Base Spindle
UJB 38 – 50 / 30

Ground plan

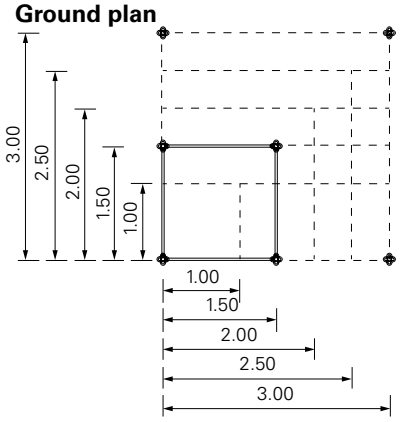

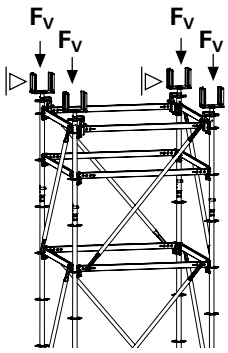

E2 Free-standing shoring tower

Operating conditions

- free-standing
- Wind attack on the broad side
- with/without additional ledgers in top and bottom sections
- Pivoting Head Spindle or Crosshead Spindle
- Height h ≤ 8.39 m
- with Ledger Braces UBL/UBL-2 all around in all bays and aligned over the height.
- In addition to the working wind, the tower is subjected to a horizontal load at the head of 0.2 kN/m²

Permissible leg load

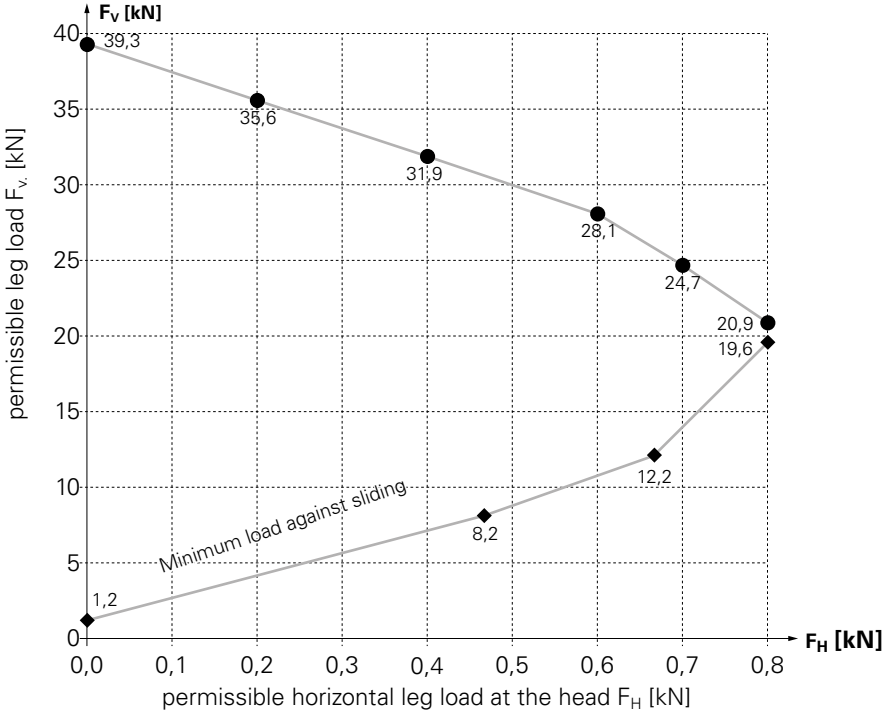

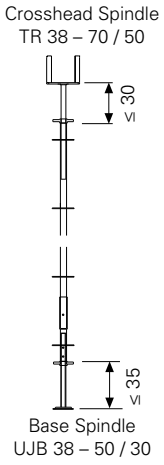

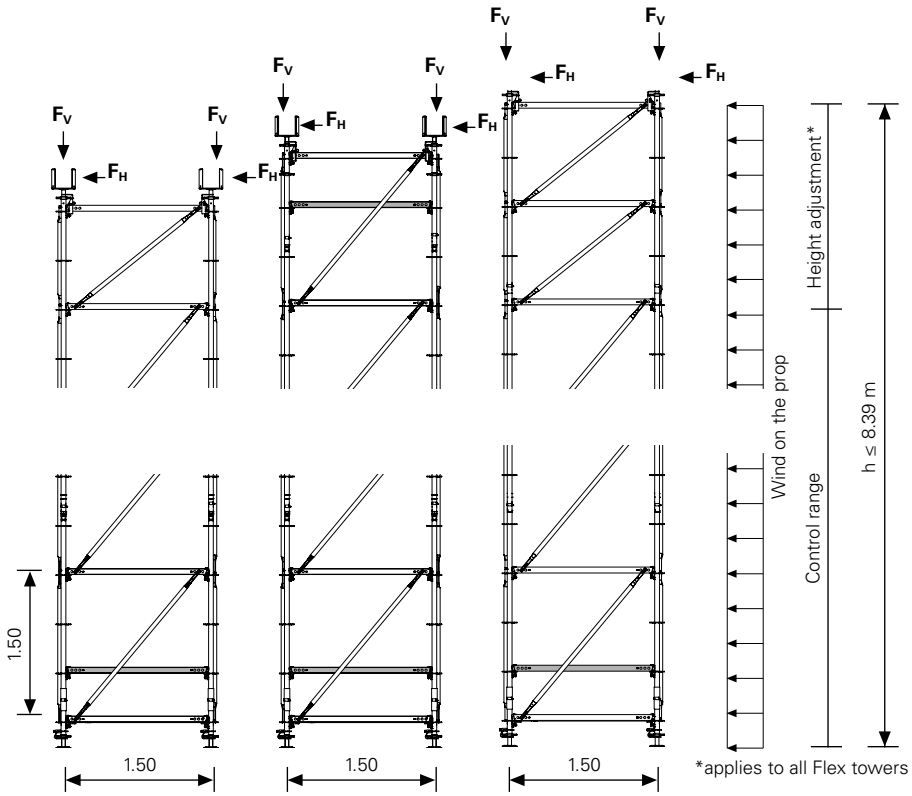

Art no.	Weight [kg]	
100244	1.200	**Base Plate UJP**

Hinweis

Without height adjustment.

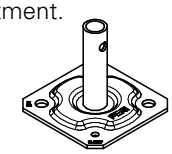

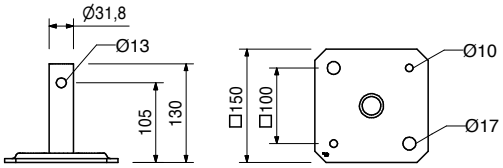

Art no.	Weight [kg]	
100411	3.390	**Adj. Base Plate UJB 38-50/30**

Note

With captive red Quick Jack Nut.

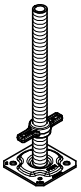

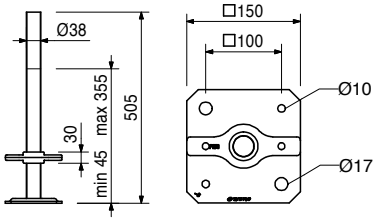

Art no.	Weight [kg]	
100242	4.570	**Adj. Base Plate UJB 38-80/55**

Note

With captive yellow Quick Jack Nut.

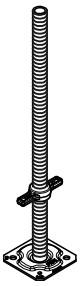

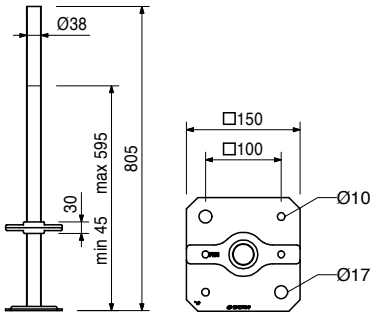

Art no.	Weight [kg]	
019780	5.250	**Base Spindle TR 38-70/50**

For heavily loaded shoring.

Note

With captive silver Quick Jack Nut.

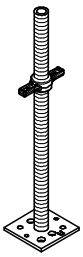

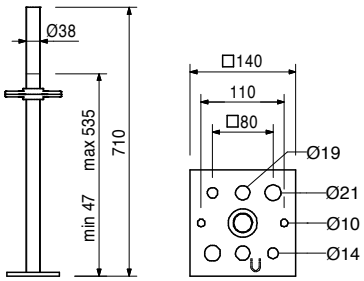

Art no.	Weight [kg]	
019950	7.780	**Crosshead Spindle TR 38-70/50**

Tilt-resistant head spindle for holding one or two GT 24 or VT 20 Girders.

Notes

With captive Quick Jack Nut.

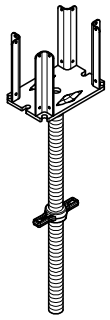

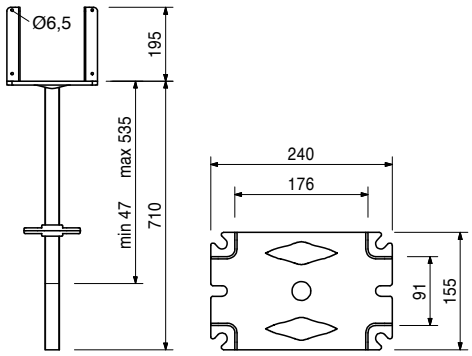

Accessory (not included)

028590	0.568	**Tension Strap 16-25 cpl.**

Art no.	Weight [kg]	
319790	6.460	**Head Spindle TR 38-70/50 galv**

Maximum inclination of the head plate on all sides 4.4°.

Notes

With captive quick jack nut.

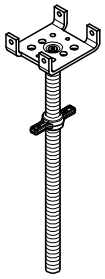

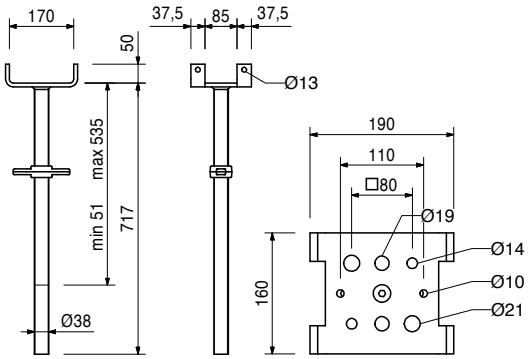

Art no.	Weight [kg]	
116081	7.040	**Adj. Crosshead Spindle-2 TR 38-70/50**

Maximum inclination of the head plate on all sides 4.4°.

Notes

With locking device and captive Quick Jack Nut.
Use only with SRU Ledger or equivalent steel beam profile.

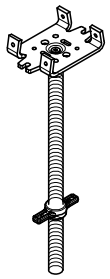

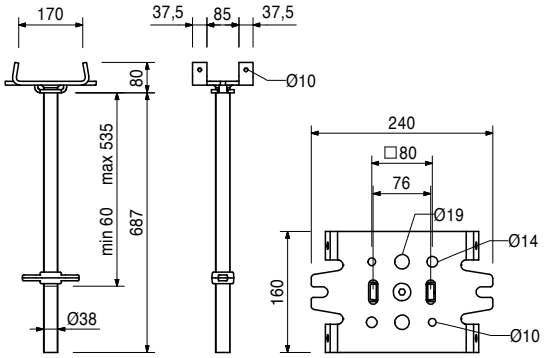

Accessory (not included)

028590	0.568	**Tension Strap 16-25 cpl.**
018300	0.564	**Cross Strap galv**

Art no.	Weight [kg]	
028590	0.568	**Tension Strap 16-25 cpl.**

For mounting 2 GT 24 or VT 20 Girders on the Cross Forkhead and Head Spindle TR 38 and on the Crosshead 20/24 or 20/24S.

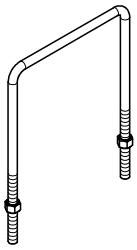

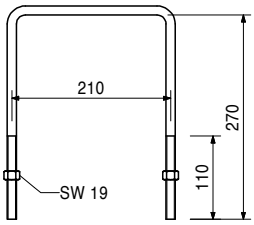

Art no.	Weight [kg]	
018300	0.564	**Cross Strap galv**

For fixing Steel Walers SRZ and SRU on the
Head Spindle TR 38.

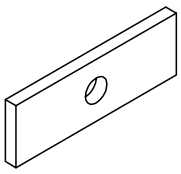

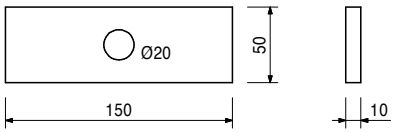

Accessory (not included)

018350	0.310	**Screw ISO4016-M16x160-4.6-galv-Nut**

Art no.	Weight [kg]	
109630	4.240	**Spindle Head SRU**

For connecting the Steel Walers SRU and SRZ on shoring scaffolds.

Notes

With captive quick jack nut.

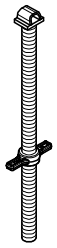

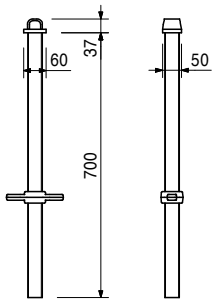

Accessory (not included)

104031	0.462	**Filler Pin Ø21x120**
018060	0.014	**Cotter Pin 4/1 galv**

Art no.	Weight [kg]	
100863	1.020	**Handle Locking UJS**

Locks base spindles and section spindles Ø 38 mm in the leg during moving procedures.

Notes

Permissible load 1.5 kN.

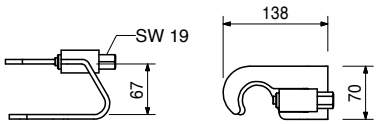

Art no.	Weight [kg]	
109563	1.460	**Head Spindle Locking UJH**

Connects Head Spindles, Section Spindles and Spindle Head with Ledger UH when moving.

Notes

Permissible load 2.1 kN.

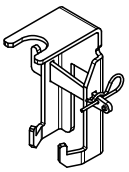

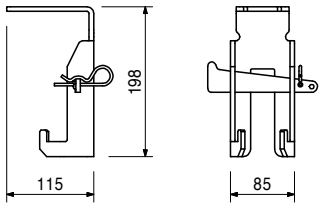

Consists of

1 pc 018060 Cotter Pin 4/1 galv

Art no.	Weight [kg]	
133499	2.260	**Base Standard UVB 25**

For fitting onto the base spindles directly.
Can also be used as 25 cm standard.

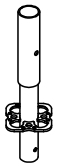

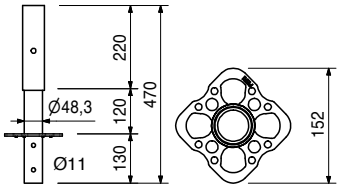

Art no.	Weight [kg]	
400014	2.470	**Base Standard UVB 24**

For fitting onto the base spindles directly.

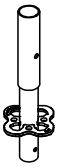

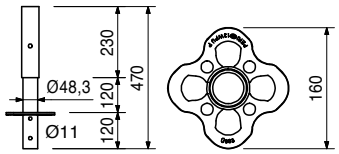

Art no.	Weight [kg]	
135187	3.580	**Base Standard UVB 50**

For fitting onto the base spindles directly.
Can also be used as 50 cm standard.

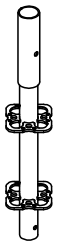

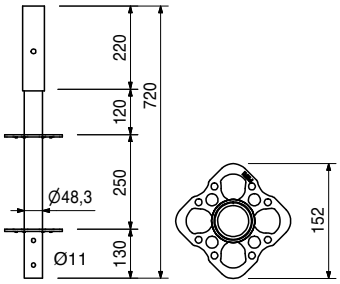

Art no.	Weight [kg]	
417194	3.980	**Base Standard UVB 49**

For fitting onto the base spindles directly. Reduces necessary spindle extensions with 25 cm rosette spacing.

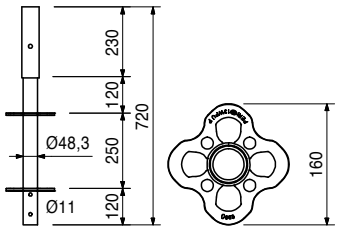

PERI UP Flex Shoring Tower

Art no.	Weight [kg]		L [mm]
		Standards UVR-2	
132219	2.490	**Standard UVR-2 50**	500
132224	4.340	**Standard UVR-2 100**	1000
132229	6.190	**Standard UVR-2 150**	1500
132234	8.030	**Standard UVR-2 200**	2000
132239	11.700	**Standard UVR-2 300**	3000

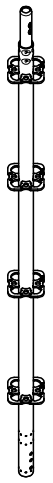

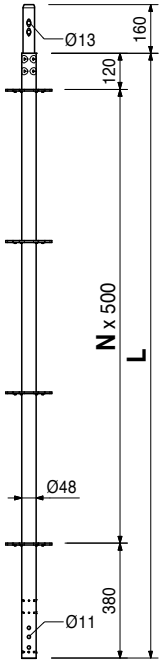

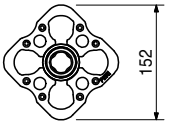

Art no.	Weight [kg]		L [mm]
		Standards UVR	
402859	3.080	**Stadard UVR 50**	500
401306	5.380	**Stadard UVR 100**	1000
402860	7.690	**Stadard UVR 150**	1500
400009	9.990	**Stadard UVR 200**	2000
400012	14.700	**Stadard UVR 300**	3000
400013	19.200	**Standard UVR 400**	4000

Without spigot to accommodate head spindles.

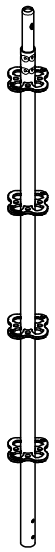

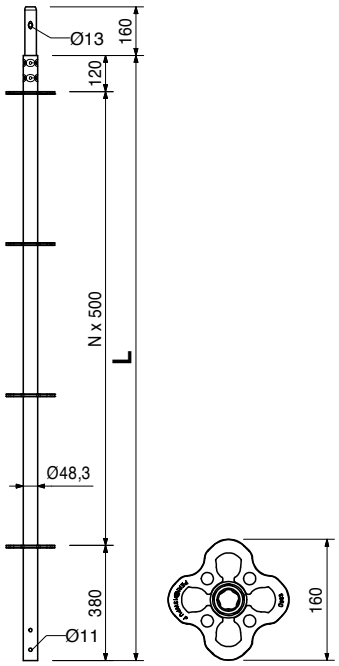

Art no.	Weight [kg]		L [mm]
		Top Standards UVH-2	
132123	2.100	**Top Standard UVH-2 50**	500
132194	4.210	**Top Standard UVH-2 100**	1000
132198	6.320	**Top Standard UVH-2 150**	1500
132200	8.420	**Top Standard UVH-2 200**	2000
132202	10.500	**Top Standard UVH-2 250**	2500

Without spigot for supporting head spindles.

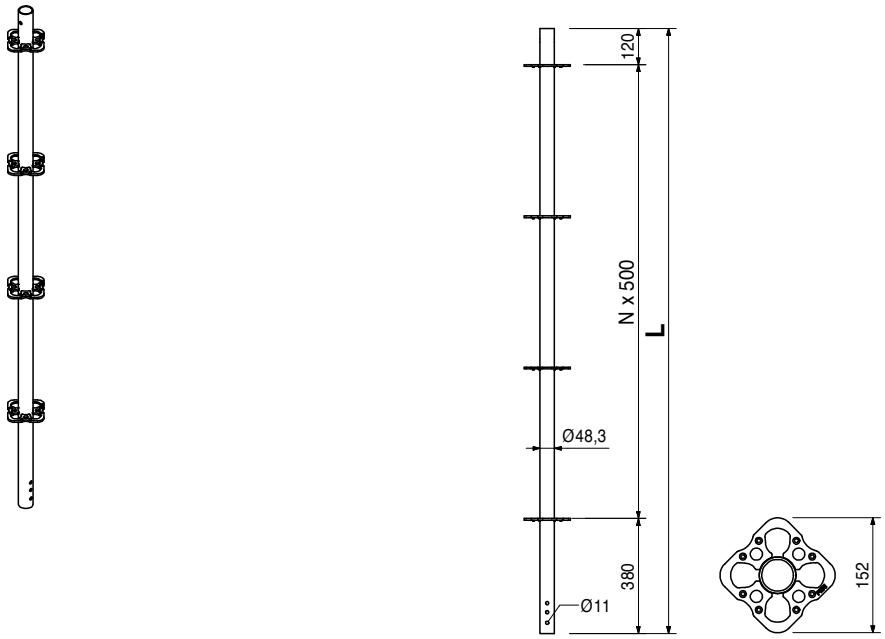

Art no.	Weight [kg]		L [mm]
		Top Standards UVH	
401309	2.510	**Top Standard UVH 50**	500
400000	4.610	**Top Standard UVH 100**	1000
400003	6.920	**Top Standard UVH 150**	1500
400005	9.230	**Top Standard UVH 200**	2000
400007	11.500	**Top Standard UVH 250**	2500

Without spigot for supporting head spindles.

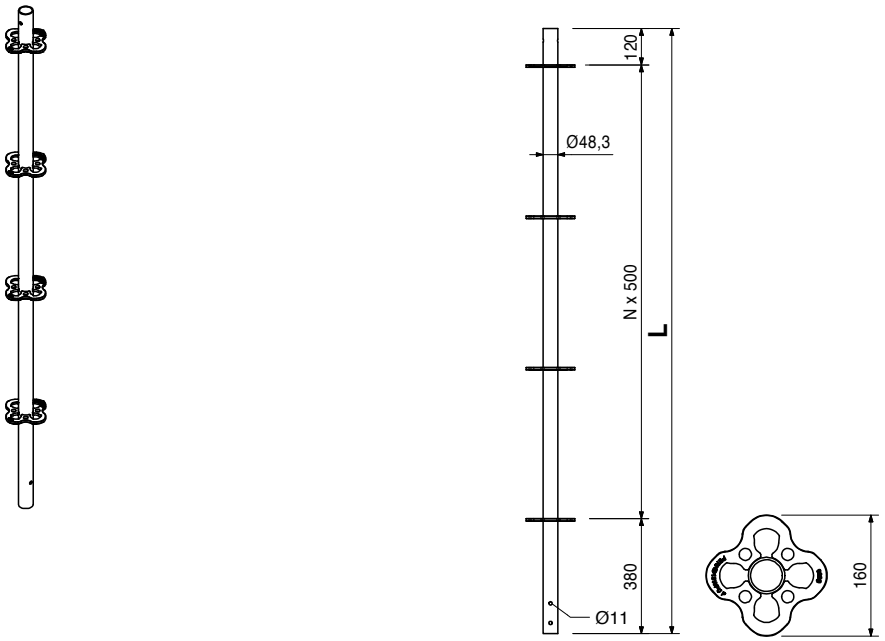

Art no.	Weight [kg]		L [mm]	X [mm]
		Horizontal Ledgers UH-2		
131995	1.400	**Horizontal Ledger UH-2 25**	204	250
133900	1.590	**Horizontal Ledger UH-2 33**	284	330
131998	2.030	**Horizontal Ledger UH-2 50**	454	500
133903	2.470	**Horizontal Ledger UH-2 67**	624	670
132213	2.680	**Horizontal Ledger UH-2 75**	704	750
132007	4.500	**Horizontal Ledger UH-2 125**	1204	1250
132010	4.670	**Horizontal Ledger UH-2 150**	1454	1500
132013	5.330	**Horizontal Ledger UH-2 175**	1704	1750
132019	6.650	**Horizontal Ledger UH-2 225**	2204	2250
132004	3.730	**Ledger UH-2 100**	954	1000
132016	5.990	**Ledger UH-2 200**	1954	2000
132025	7.310	**Ledger UH-2 250**	2454	2500
132022	8.640	**Ledger UH-2 300**	2954	3000

Notes

With length marking for easier identification.

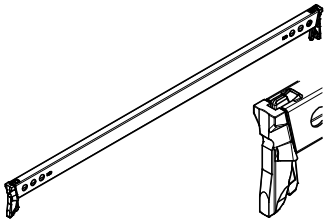

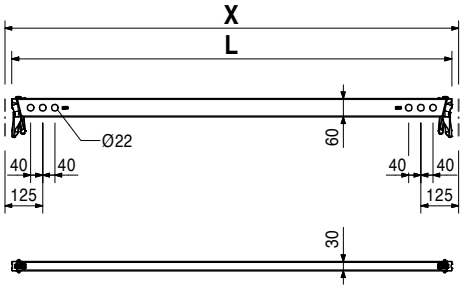

Art no.	Weight [kg]		L [mm]	X [mm]
		Horizontal Ledgers UH Plus		
414613	1.430	**Horizontal Ledger UH 25 Plus**	204	250
414595	2.080	**Horizontal Ledger UH 50 Plus**	454	500
429982	2.520	**Horizontal Ledger UH 67 Plus**	624	670
414629	2.740	**Horizontal Ledger UH 75 Plus**	704	750
414632	4.470	**Horizontal Ledger UH 100 Plus**	954	1000
414638	5.440	**Horizontal Ledger UH 125 Plus**	1204	1250
414641	4.720	**Horizontal Ledger UH 150 Plus**	1454	1500
417032	5.390	**Horizontal Ledger UH 175 Plus**	1704	1750
414645	6.050	**Horizontal Ledger UH 200 Plus**	1954	2000
416356	6.710	**Horizontal Ledger UH 225 Plus**	2204	2250
414648	7.370	**Horizontal Ledger UH 250 Plus**	2454	2500
414651	8.690	**Horizontal Ledger UH 300 Plus**	2954	3000

Notes

With length marking for easier identification.

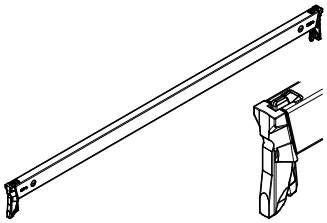

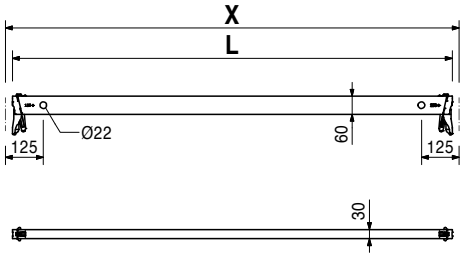

Art no.	Weight [kg]		L [mm]	X [mm]	Y [mm]
		Ledger Braces UBL-2			
132771	2.140	**Ledger Brace UBL-2 100/50**	901	1000	500
132773	2.830	**Ledger Brace UBL-2 100/100**	1250	1000	1000
132775	3.680	**Ledger Brace UBL-2 100/150**	1677	1000	1500
132777	4.600	**Ledger Brace UBL-2 100/200**	2136	1000	2000
132779	3.030	**Ledger Brace UBL-2 150/50**	1347	1500	500
132781	3.530	**Ledger Brace UBL-2 150/100**	1601	1500	1000
132783	4.230	**Ledger Brace UBL-2 150/150**	1953	1500	1500
132785	5.040	**Ledger Brace UBL-2 150/200**	2358	1500	2000
132787	5.330	**Ledger Brace UBL-2 175/200**	2500	1750	2000
132789	3.970	**Ledger Brace UBL-2 200/50**	1820	2000	500
132791	4.360	**Ledger Brace UBL-2 200/100**	2016	2000	1000
132793	4.940	**Ledger Brace UBL-2 200/150**	2305	2000	1500
132795	5.640	**Ledger Brace UBL-2 200/200**	2658	2000	2000
132797	4.450	**Ledger Brace UBL-2 225/50**	2062	2250	500
132808	4.800	**Ledger Brace UBL-2 225/100**	2236	2250	1000
132810	5.980	**Ledger Brace UBL-2 225/200**	2829	2250	2000
132812	5.250	**Ledger Brace UBL-2 250/100**	2462	2500	1000
132814	5.730	**Ledger Brace UBL-2 250/150**	2705	2500	1500
132816	6.340	**Ledger Brace UBL-2 250/200**	3010	2500	2000
132827	5.920	**Ledger Brace UBL-2 300/50**	2795	3000	500
132829	6.180	**Ledger Brace UBL-2 300/100**	2926	3000	1000
132831	6.590	**Ledger Brace UBL-2 300/150**	3133	3000	1500
132833	7.120	**Ledger Brace UBL-2 300/200**	3400	3000	2000

Suspension in holes of the horizontal ledgers.

Notes

With length embossing and coloured sticker for easy identification.
UBL-2 150/250 is identical with UBL-2 300/50.
UBL-2 225/150 is identical with UBL-2 175/200.
UBL-2 250/50 is identical with UBL-2 200/150.
UBL-2 75/200 is identical with UBL-2 225/50.

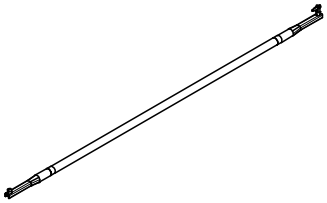

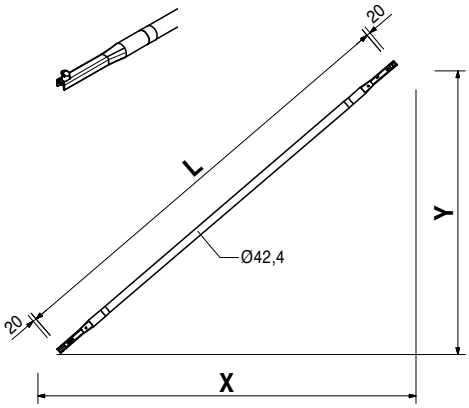

Art no.	Weight [kg]		L [mm]	X [mm]	Y [mm]
		Ledger Braces UBL			
415156	2.660	**Ledger Brace UBL 100/50**	901	1000	500
415513	4.640	**Ledger Brace UBL 100/150**	1677	1000	1500
415157	5.810	**Ledger Brace UBL 100/200**	2136	1000	2000
407867	3.790	**Ledger Brace UBL 150/50**	1347	1500	500
400055	4.440	**Ledger Brace UBL 150/100**	1601	1500	1000
402846	5.340	**Ledger Brace UBL 150/150**	1953	1500	1500
400057	6.380	**Ledger Brace UBL 150/200**	2358	1500	2000
409034	6.740	**Ledger Brace UBL 175/200**	2500	1750	2000
404391	5.000	**Ledger Brace UBL 200/50**	1820	2000	500
400059	5.500	**Ledger Brace UBL 200/100**	2016	2000	1000
402862	6.240	**Ledger Brace UBL 200/150**	2305	2000	1500
400061	7.160	**Ledger Brace UBL 200/200**	2658	2000	2000
430282	4.450	**Ledger Brace UBL 225/50**	2062	2250	500
430283	4.800	**Ledger Brace UBL 225/100**	2236	2250	1000
417689	7.580	**Ledger Brace UBL 225/200**	2829	2250	2000
400063	6.640	**Ledger Brace UBL 250/100**	2462	2500	1000
402861	7.260	**Ledger Brace UBL 250/150**	2705	2500	1500
400065	8.050	**Ledger Brace UBL 250/200**	3010	2500	2000
404762	7.490	**Ledger Brace UBL 300/50**	2795	3000	500
400067	7.830	**Ledger Brace UBL 300/100**	2926	3000	1000
404766	8.360	**Ledger Brace UBL 300/150**	3133	3000	1500
400069	9.050	**Ledger Brace UBL 300/200**	3400	3000	2000

Suspension in holes of the horizontal ledgers.

Notes

With length embossing and coloured sticker for easy identification.
UBL 150/250 is identical with UBL 300/50.
UBL 225/150 is identical with UBL 175/200.
UBL 250/50 is identical with UBL 200/150.
UBL 75/200 is identical with UBL 225/50.

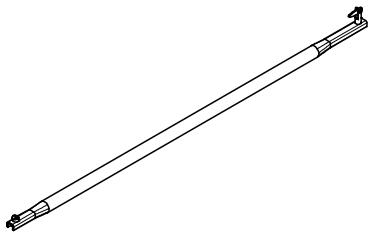

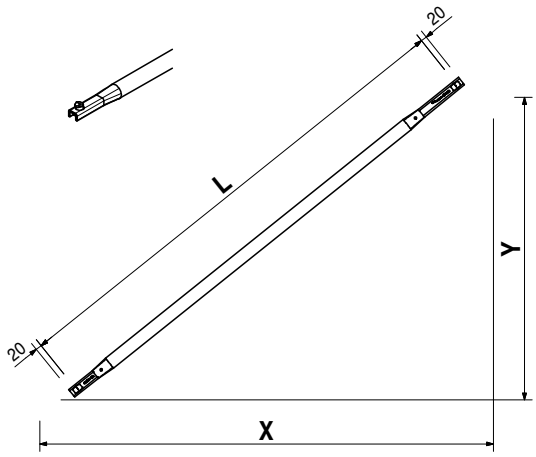

Art no.	Weight [kg]		L [mm]	X [mm]	Y [mm]
		Horizontal Braces UBH Flex			
114818	4.590	**Horizontal Brace UBH Flex 100/100**	1335	1000	1000
114904	5.630	**Horizontal Brace UBH Flex 125/125**	1689	1250	1250
114821	5.730	**Horizontal Brace UBH Flex 150/100**	1725	1500	1000
114908	6.170	**Horizontal Brace UBH Flex 150/125**	1874	1500	1250
114912	6.660	**Horizontal Brace UBH Flex 150/150**	2042	1500	1500
114820	7.010	**Horizontal Brace UBH Flex 200/100**	2161	2000	1000
124097	7.780	**Horizontal Brace UBH Flex 200/150**	2422	2000	1500
114916	8.740	**Horizontal Brace UBH Flex 200/200**	2749	2000	2000
114896	8.130	**Horizontal Brace UBH Flex 250/75**	2541	2500	750
114819	8.360	**Horizontal Brace UBH Flex 250/100**	2620	2500	1000
114996	8.650	**Horizontal Brace UBH Flex 250/125**	2720	2500	1250
124101	9.000	**Horizontal Brace UBH Flex 250/150**	2838	2500	1500
114920	9.840	**Horizontal Brace UBH Flex 250/200**	3123	2500	2000
114928	10.800	**Horizontal Brace UBH Flex 250/250**	3456	2500	2500
114900	9.550	**Horizontal Brace UBH Flex 300/75**	3025	3000	750
114892	9.740	**Horizontal Brace UBH Flex 300/100**	3092	3000	1000
124105	10.300	**Horizontal Brace UBH Flex 300/150**	3279	3000	1500
114924	11.000	**Horizontal Brace UBH Flex 300/200**	3528	3000	2000
114932	11.900	**Horizontal Brace UBH Flex 300/250**	3826	3000	2500
114936	12.900	**Horizontal Brace UBH Flex 300/300**	4163	3000	3000

For horizontal bracing of towers.
Also for use beneath Decks UDG.

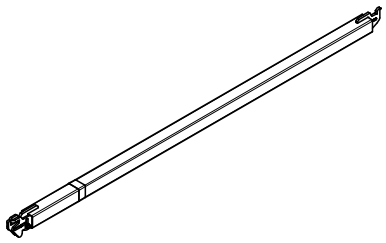

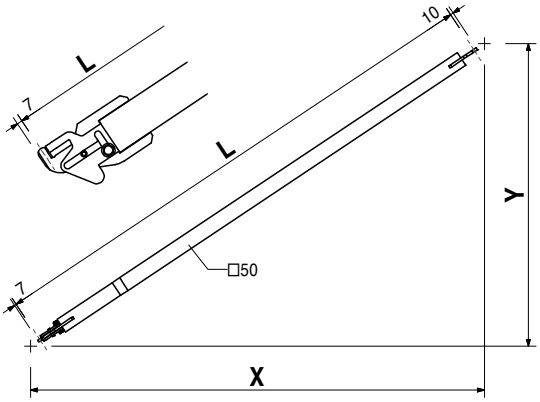

Art no.	Weight [kg]		X [mm]	zul. p [kN/m²]
		Steel Decks UDG-2 25		
138607	2.200	**Steel Deck UDG-2 25x 25**	250	6
132479	3.190	**Steel Deck UDG-2 25x 50**	500	6
132483	3.960	**Steel Deck UDG-2 25x 67**	670	6
132488	4.320	**Steel Deck UDG-2 25x 75**	750	6
132492	5.450	**Steel Deck UDG-2 25x100**	1000	6
132502	6.590	**Steel Deck UDG-2 25x125**	1250	6
132505	7.730	**Steel Deck UDG-2 25x150**	1500	6
132508	10.500	**Steel Deck UDG-2 25x200**	2000	6
132511	12.900	**Steel Deck UDG-2 25x250**	2500	4.5
132515	15.800	**Steel Deck UDG-2 25x300**	3000	3

Length X: 500 - 1500 with H of 45 mm
Length X: 2000 - 2500 with H of 60 mm
Length X: 3000 with H of 70 mm

Notes

Values correspond to EN 12811-1

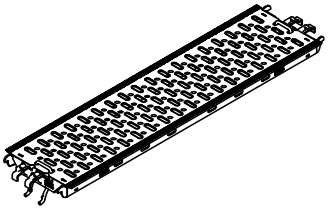

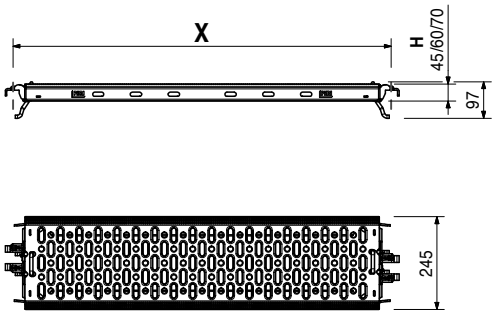

Art no.	Weight [kg]		X [mm]	zul. p [kN/m²]
		Steel Decks UDG 25		
424124	3.810	**Steel Deck UDG 25x 50**	500	6
432858	4.810	**Steel Deck UDG 25x 67**	670	6
424121	5.180	**Steel Deck UDG 25x 75**	750	6
424118	6.550	**Steel Deck UDG 25x100**	1000	6
424115	7.940	**Steel Deck UDG 25x125**	1250	6
424112	9.330	**Steel Deck UDG 25x150**	1500	6
424109	12.200	**Steel Deck UDG 25x200**	2000	6
423771	14.900	**Steel Deck UDG 25x250**	2500	4.5
424915	17.700	**Steel Deck UDG 25x300**	3000	3

Assembly onto Horizontal Ledgers UH.

Notes

Values correspond to EN 12811-1.

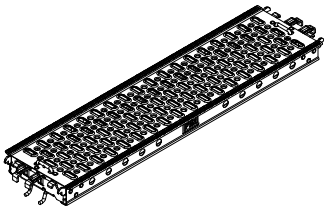

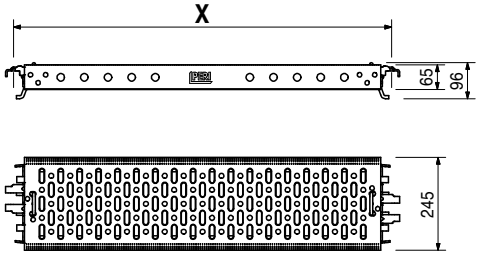

Art no.	Weight [kg]	
107160	3.950	**Connector MP/SRU**

As compensation element between the Prop Head MP/SRU and inclined positioned Steel Waler SRU.

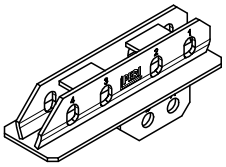

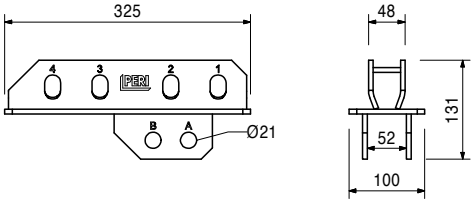

Accessory (not included)

104031	0.462	**Filler Pin Ø21x120**
018060	0.014	**Cotter Pin 4/1 galv**

Art no.	Weight [kg]	
104031	0.462	**Filler Pin Ø21x120**

For different connections.

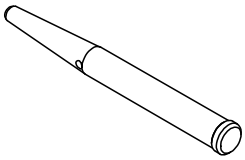

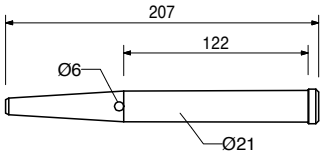

Accessory (not included)

018060	0.014	**Cotter Pin 4/1 galv**

Art no.	Weight [kg]	
018060	0.014	**Cotter Pin 4/1 galv**

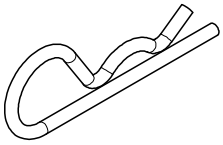

Art no.	Weight [kg]	
100301	0.969	**Spigot ULT 32**

Single pin for connection of tubes Ø 48.3 x 3.2 mm, e.g. lattice girders or top standards without interlock.

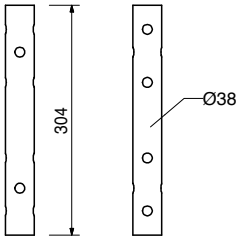

Accessory (not included)

111053	0.059	**Pin Ø48/Ø57**
100719	0.060	**Screw ISO4014-M10x70-8.8-galv**

Art no.	Weight [kg]	
111053	0.059	**Pin Ø48/Ø57**

As tension-proof connection of standards with a diameter of 48 up to 57 mm.

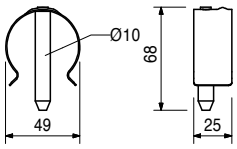

Art no.	Weight [kg]	
100719	0.060	**Screw ISO4014-M10x70-8.8-galv**

As tension-proof connection of standards at suspended scaffolds and formwork girders.

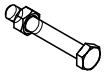

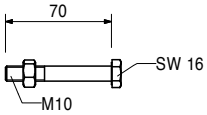

Art no.	Weight [kg]	
116306	1.700	**Rosett Coupler UEV 180°**

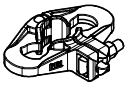

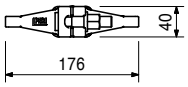

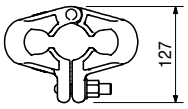

Art no.	Weight [kg]	
126453	1.630	**Rosett Coupler UEV 90°**

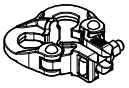

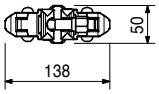

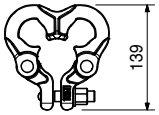

Art no.	Weight [kg]	
102400	1.100	**Sw. Coupl. EN74 SW38/48 galv**

For scaffold tubes Ø 48 mm and Ø 38 mm.

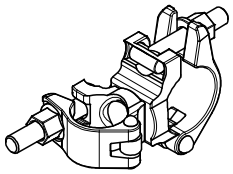

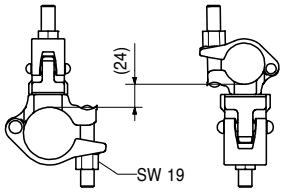

Art no.	Weight [kg]	
017010	1.400	**Sw. Coupl. SW48/48 galv**

For Scaffold Tubes Ø 48 mm.

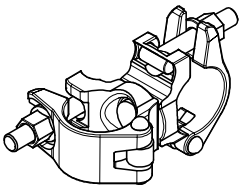

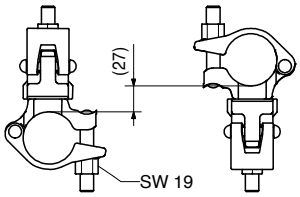

Art no.	Weight [kg]		L [mm]
		Scaffold Tubes 48.3x3.2mm galv	
026417	0.000	**Cutting Costs Scaffold Tube**	1
026411	3.550	**Scaffold Tube 48.3x3.2mm 1m galv**	1000
026412	7.100	**Scaffold Tube 48.3x3.2mm 2m galv**	2000
026413	10.650	**Scaffold Tube 48.3x3.2mm 3m galv**	3000
026414	14.200	**Scaffold Tube 48.3x3.2mm 4m galv**	4000
026419	17.750	**Scaffold Tube 48.3x3.2mm 5m galv**	5000
026418	21.600	**Scaffold Tube 48.3x3.2mm 6m galv**	6000
026415	3.550	**Scaffold Tube 48.3x3.2mm lfm galv**	1000

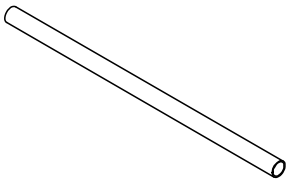

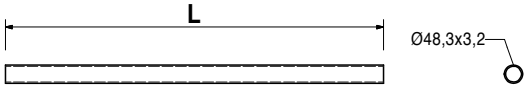

Art no.	Weight [kg]	
727193	0.790	**Carpenters Hammer w. Magnet**

Art no.	Weight [kg]	
796061	0.450	**Scaff. Build Ratchet SW19/22**

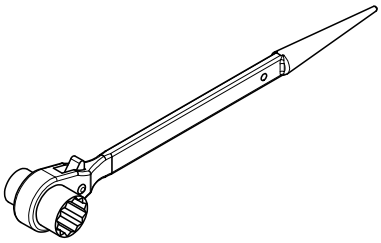

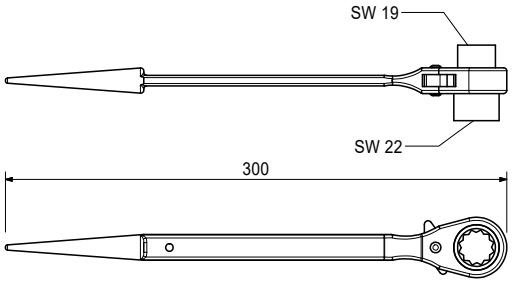

Art no.	Weight [kg]	
019200	162.000	**Trolley with Winch**

For moving towers and tables with MULTIPROP, PERI UP Flex, PERI UP Flex Plus, PERI UP Flex MDS K and PD 8 with appropriate support for the system.

Notes

Follow Instructions for Use!
Permissible load capacity 1,0 t.

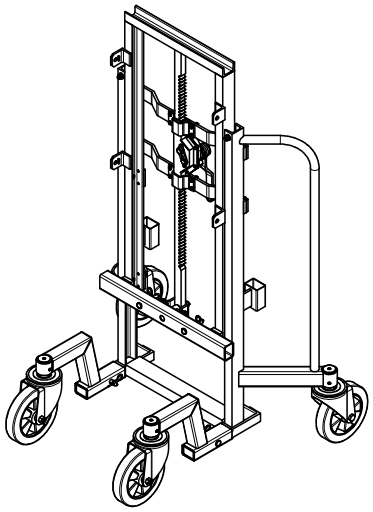

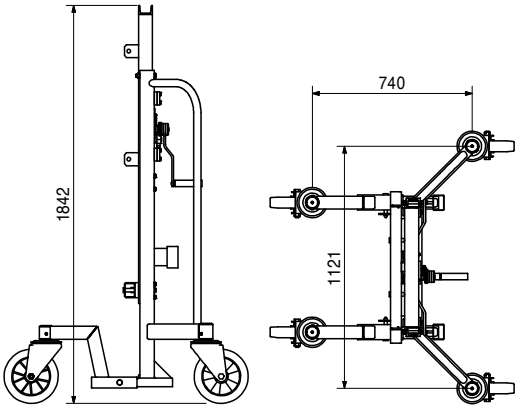

		Accessory (not included)
418605	21.500	**Connection Rosett - Trolley**
417954	21.200	**Connection Rosett PLUS-Trolley**
118114	14.200	**Connection MP-Trolley**
130501	27.100	**Connector PERI UP - Trolley**
118115	11.000	**Connection PD8-Trolley**

Art no.	Weight [kg]	
130501	27.100	**Connector PERI UP - Trolley**

For moving PERI UP Flex Shoring Tower, Shoring Tower Plus and Shoring Tower MDS K with Trolley with Winch.

Notes

Consisting of receptacle left and right (4 parts)

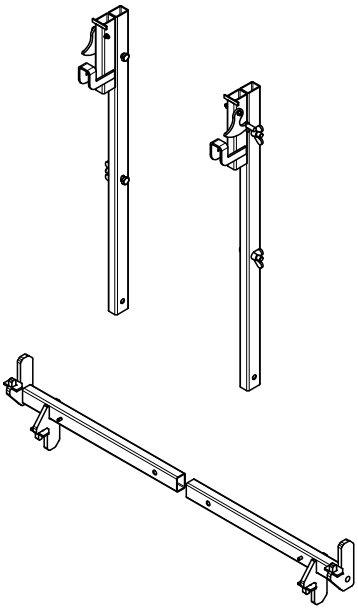

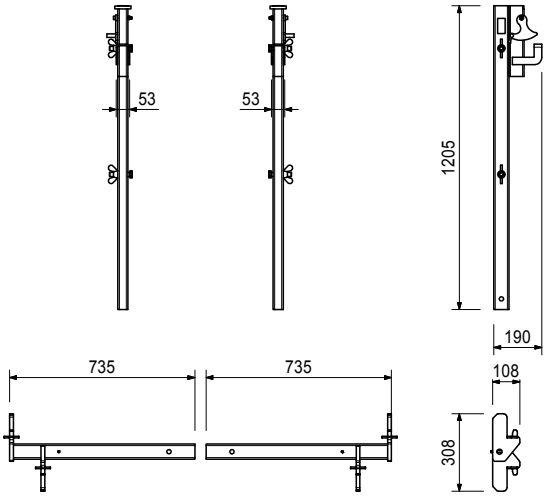

The optimal System for every Project and every Requirement

Wall Formwork

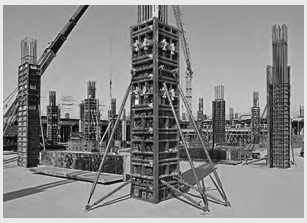

Column Formwork

Slab Formwork

Climbing Systems

Bridge Formwork

Tunnel Formwork

Shoring Systems

Construction Scaffold

Facade Scaffold

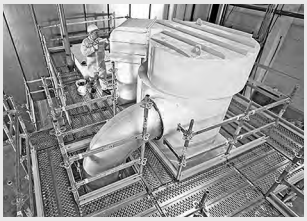

Industrial Scaffold

Access

Protection Scaffold

Safety Systems

System-Independent Accessories

Services

PERI Danmark A/S
Forskalling & Stilladssystemer
Greve Main 26
2670 Greve
Tlf. +45 4345.3627
peri@peri.dk
www.peri.dk

EN Int Version 2.1 | DO-23-0246569 © PERI DK