Hydraulic Lowering Unit HD

Item no. 126436 / Item no. 126438

Translation of the Original Instructions for Use – Edition 10/2017

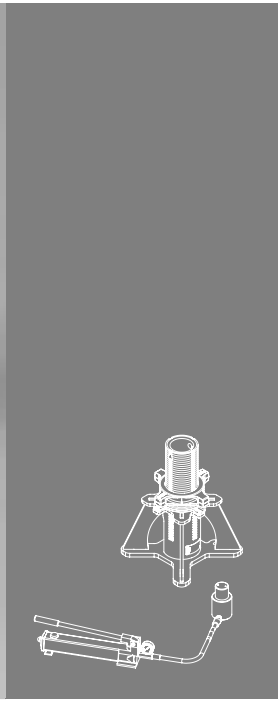

Content

Introduction

Overview	2
Safety instructions	4
Intended use	6
Misapplications, Inspections	7
Storage and transportation	8
Technical data	10
Identification markings	12

Application

Assembly of the hydraulic components	15
Topping up the hydraulic oil	16
Bleeding the hydraulics	16
Maintenance and repairs	17
Changing the hydraulic oil	17
Installing the hydraulics	18
Load-controlled preloading	19
Load-controlled lowering	22
Displacement-controlled lowering	26
Assembly of the Connector UJC	28
Dismantling	29
Troubleshooting	32

Appendix

Components	34
EC Declaration of Conformity	36

Key

Safety instructions

Visual check

Risk of crushing

Tip

Eye protection

Safety helmet

Note

Hand protection

Foot protection

Translation of the Original Instructions for Use

Introduction

Overview

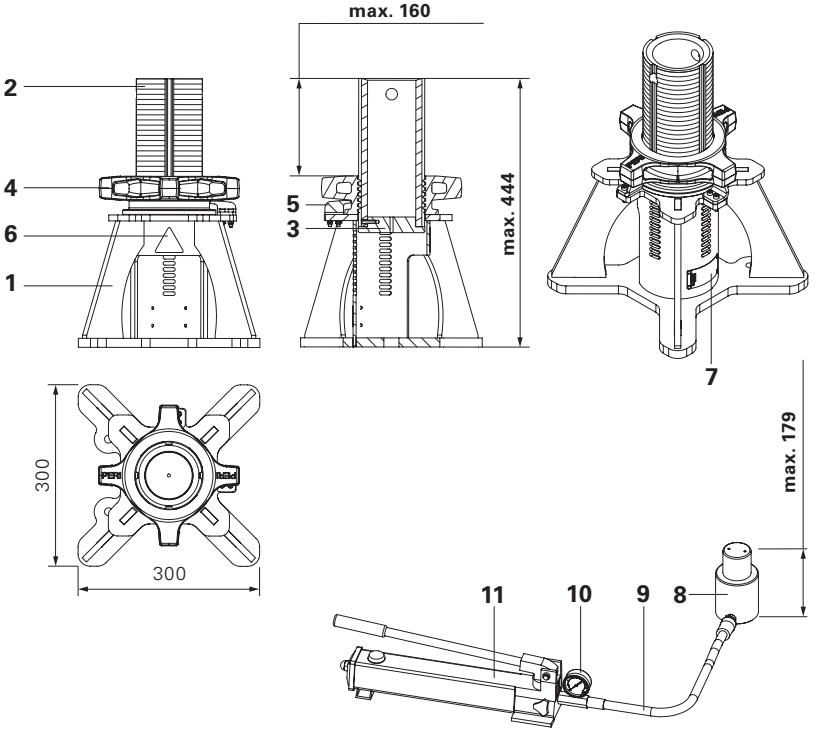

Lowering Jack HD

(1) Base
(2) Spindle Tube TR 110 x 9
(3) Pressure piece (red)
(4) Adjusting Nut TR 110 x 9
(5) Hold-down (2 pcs)
(6) Sticker (warning of hand injuries)
(7) Type plate

ENERPAC Hydraulic Unit HD

(8) Hydraulic cylinder
(9) Hydraulic hose
(10) Manometer
(11) Hydraulic hand pump

Introduction

Safety instructions

General

PERI products have been designed for exclusive use in the industrial and commercial sectors by suitably trained personnel only!

When using PERI products, the Instructions for Use as well as all information on the type plate must be observed!

For the application and inspection of our products, the current safety regulations and guidelines must be observed in the respective countries where they are being used!

The contractor must ensure that the Instructions for Use provided by PERI are available at all times for the users and that they are fully understood!

The contractor can only assign those persons to independently use PERI products who are actually familiar with the task!

PERI products are to be used as intended thus ensuring that persons are never put at risk in any way!
The maximum bearing capacity of PERI products must not be exceeded!

These Instructions for Use contain information for ensuring proper handling as well as correct application, care and maintenance.

PERI products must be protected against the effects of the weather and aggressive materials if safety is then likely to be affected!

All persons using PERI products must check the equipment during use for obvious defects, e.g. deformations, cracks, breaks, incomplete markings!

Do not use damaged products!

After the occurrence of any extraordinary events, e.g.
– storms
– earthquakes
– accidents
or longer downtimes on the construction site, the Hydraulic Lowering Unit HD and its components must be checked for damage, stability and function by a qualified person.

The contractor must ensure that the minimum requirements regarding personal protective equipment are fulfilled:
– safety gloves,
– safety shoes,
– safety glasses,
– safety helmet.

Introduction

Safety instructions

Product-specific
Only use components which are specified in these Instructions for Use.

Observe storm warnings! Depending on the type of load and the surface area subjected to wind attack, the decision whether sufficient safety is in place during preloading or lowering is taken at the time on the jobsite.

Always lift up or set down loads smoothly without any jerking!

Before lifting or lowering takes place, remove or secure all loose parts!

Before preloading or lowering, check that the load is securely connected to the Hydraulic Lowering Unit HD.

Do not allow any objects to fall on the hydraulic hose, pump, manometer or cylinder.

Ensure that no kinks occur in the hydraulic hose during installation. Tight bends should be avoided.

The hydraulic cylinder must be in a perpendicular position in the Lowering Jack HD. The pressure disk of the lowering jack must be positioned flush on the complete piston surface of the hydraulic cylinder piston.

As soon as the required position has been reached, the hydraulic cylinder must be relieved by tightening the adjusting nut. The hydraulic cylinder must not permanently carry the load.

Before the load is released from the Hydraulic Lowering Unit HD, ensure that the load is secure!

Set up the lowering jack on an even and sufficient load-bearing surface, e.g. for load distribution: steel plate 350 x 350 x 15 mm on Class C 12/15 concrete.

The structures shown in these PERI Instructions for Use are presented here as examples with only one assembly version.

A project-specific static in which the force to be applied has been determined, as well as a preloading and lowering plan, must be available!

The illustration on the cover of this brochure is a system visualisation.
The structures shown in these Instructions for Use are examples and feature only one component size. They are valid accordingly for all component sizes contained in the standard configuration.

Introduction

Intended use

The Hydraulic Lowering Unit HD was designed for perpendicular acceptance of vertical loads, preloading and the controlled lowering of individual loads up to 200 kN.

The Hydraulic Lowering Unit HD consists of the Lowering Jack HD and ENERPAC Hydraulic Unit HD.

Only the Connector UJC and Connector HD may be mounted on the Hydraulic Lowering Unit HD.

The Connectors UJC and HD can be pivoted on all sides up to an angle of 2°.

Only heavy-duty props from the PERI UP Flex system may be used.

Only ENERPAC hydraulics as described in these Instructions for Use may be used.

The Hydraulic Lowering Unit HD is not to be used in continuous operations. It has been designed only for temporary preloading and lowering of PERI UP Flex HD Heavy-Duty Props.

The hydraulic system is not suitable for use in areas susceptible to explosions.

The product described here corresponds to the relevant provisions and regulations of Machinery Directive 2006/42/EC.

These Instructions for Use serve as the basis for the project-related risk assessment as well as instructions for the provision and use of the system by the contractor. However, they do not replace these in any way.

The Hydraulic Lowering Unit HD may only be used:

1. Within the permissible load-bearing range, max. 200kN.
2. Within the permissible temperature limits of -20° C to +40° C.
3. When in faultless condition.
4. If correctly mounted.
5. If the user has read and understood these Instructions for Use.
6. Only if using the attachment parts as described in these Instructions for Use.

Introduction

Misapplications

The use in a way not intended or deviating from the intended use according to the Instructions for Use represents a misapplication with a potential safety risk.

Changes to PERI components are not permitted.

Only PERI original parts may be used. The use of other products and spare parts is not allowed.

Inspections

Safety check
The contractor arranges for an inspection to take place before initial operations begin, which is to be carried out by a suitably qualified person.

Inspection before initial operations commence
The inspection includes a visual and functional check:
- deformation of the parts,
- wear,
- mechanical damage,
- availability of all components,
- damage due to corrosion,
- cracks, crushing, notches on welding seams and components,
- indications of impermissible heating or contact with fire,
- check system connections and other connections for leakage and that they are also securely fixed,
- check oil level in pump tank and top up if necessary.

Functional check
1. Ensure that the adjusting nut (4) can be easily moved without cross-threading.
2. The spindle tube (2) must be easily turnable.

Implementation of anything beyond the usual scope of inspection is subject to the discretion of the qualified person and can extend to additional checks.

Introduction

Storage and transportation

General
Do not drop the Hydraulic Lowering Unit HD.

Store and transport the Hydraulic Lowering Unit HD ensuring that no unintentional change in its position is possible.

During the moving procedure, ensure that components are picked up and set down so that any unintentional falling over, falling apart, sliding, falling down or rolling is avoided.

The components are to be stored in a dry and clean condition as well as protected against corrosion at temperatures from -20° C to +40° C.

Lowering Jack HD
For the Lowering Jack HD, only use original PERI storage and transport systems, e.g. wire crates.

ENERPAC Hydraulic Unit HD
Never lift the Hydraulic Unit HD at the hose or swivel couplers. Only transport by holding the pump and cylinder.

Do not place loads on the hydraulic components.

The vent and filler cap (11a) must be closed before transporting the pump in order to prevent any loss of oil.

If the hydraulic components are separated, the dust caps must be screwed on immediately so that no impurities can cause a subsequent malfunction of the hydraulic system.

When transporting or placing in temporary storage, the hydraulic components (hose, cylinder and hand pump) must be separately stored and transported in the designated aluminum case. (Fig. 1)

Introduction

Storage and transportation

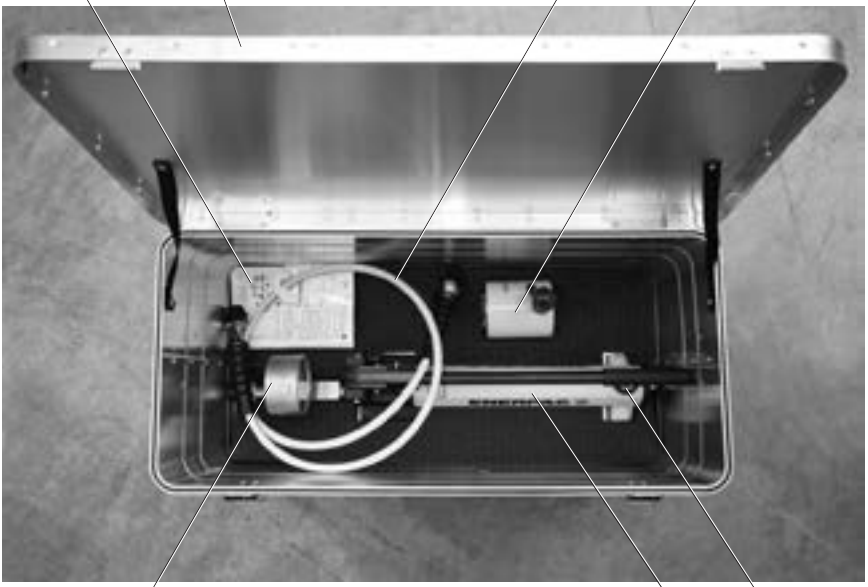

Fig. 1

Pos.	Component	Qty
8	Hydraulic cylinder	1
9	Hydraulic hose	1
10	Manometer	1
11	Hydraulic hand pump	1
11a	Vent and filler cap	1
12	Aluminium case (780 x 380 x 380 mm)	1
13	Instructions for Use	1

Introduction

Technical data

Lowering Jack HD

Designation	Dimensions	Unit
Max. load-bearing capacity	200	kN
Thread	TR 110 x 9 P43	mm
Length x width	300 x 300	mm
Min. height	344	mm
Max. height	444	mm
Max. stroke	10	cm
Weight	21.4	kg
Inclination compensation via/by means of connectors	2°	Degrees

ENERPAC Hydraulic Unit HD

Hydraulic hose	Description	Unit
Type	WP H700-Serie E6 3Q13 |0032|	
Model no.	H-7206	
Max. operating pressure	10000 [700]	psi [bar]
Length	1800	mm
Hose connection	3/8“ NPT	Inch
Internal diameter	6.4	mm
Weight	0.9	kg

Hydraulic hand pump	Description	Level 1	Level 2	Unit
Type	P-392			
Pressure stages	2			
Max. nominal pressure		200 [14]	10000 [700]	psi [bar]
Oil volume per stroke		.687 [11.26]	.151 [2.47]	in^3 [cm^3]
Usable oil tank capacity	55 [900]			in^3 [cm^3]
Changeover pressure	188 [13]			psi [bar]
Max. leverage force	42.2			kg
Piston stroke	25.4			mm
Weight	4.1			kg

Introduction

Technical data

ENERPAC Hydraulic Unit HD

Hydraulic cylinder	Description	Unit
Type	RCS 302 [single-acting]	
Max. compressive force	295	kN
Max. operating pressure	10000 [700]	psi [bar]
Stroke	62	mm
Structural height. retracted	117	mm
Max. structural height	179	mm
Effective piston area	42.1	cm^2
Oil volume	16 [261]	in^3 [cm^3]
Weight	6.8	kg

Manometer	Description	Unit
Type	specially designed for RCS 302	
Max. operating pressure	10000 [700]	psi [bar]
Max. compressive force	295	kN
Weight	0.23	kg

Hydraulic oil	Description	Unit
Type	HF-95Y	
Viscosity index	100	min
Viscosity at 210 °F [100 °C]	42 / 45	S.U.S.
Viscosity at 100 °F [38 °C]	150 / 165	S.U.S.
Viscosity at - 20 °F [0 °C]	< 12.000	S.U.S.
API gravity	31.0 / 33.00	
Flashpoint. C.O.C.	400 [205]	°F [°C]
Flow point	-25 [-32]	°F [°C]
Aniline point	210 / 220 [100 / 105]	°F [°C]
Paraffin basis colour	Blue	

Introduction

Identification markings

Caution
Do not use the Hydraulic Lowering Unit HD with missing or illegible markings or indicating labels!

Lowering Jack HD

Type plate	Warning label

Inspection plate

This inspection plate is to be attached close to the type plate by PERI rental park personnel. It indicates when the Hydraulic Lowering Unit HD is to be inspected again.

Introduction

Identification markings

ENERPAC Hydraulic Unit HD

Hydraulic cylinder	Indicating label

Hydraulic hand pump	Manometer

Inner scale = load in kN
Outer scale = pressure in bar
max. perm. load = 200 kN

Introduction

Identification markings

ENERPAC Hydraulic Unit HD

Hydraulic hose

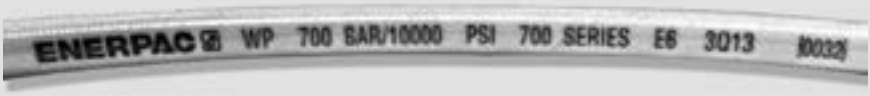

Warning sign on the hydraulic hose

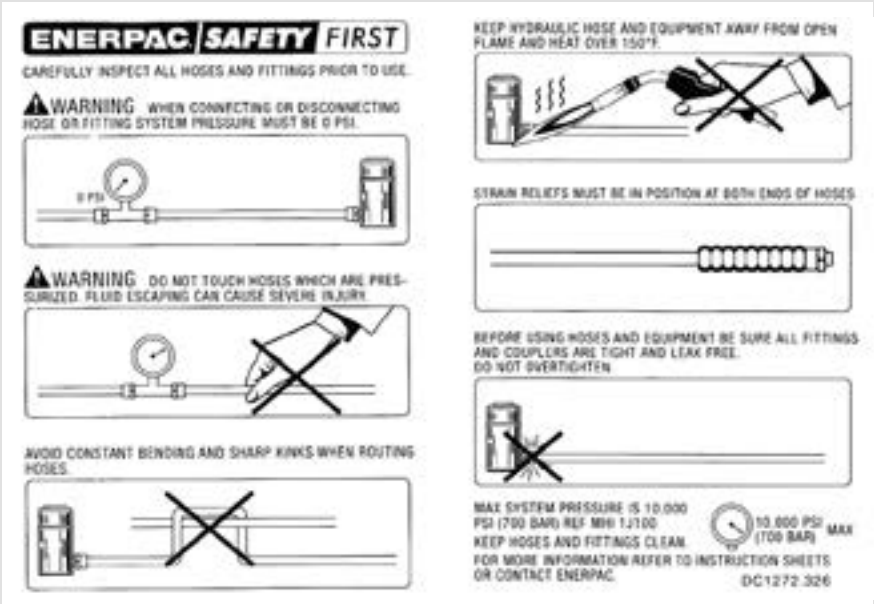

Application

Assembly of the hydraulic components

Assembly

Warning
Worn or damaged components are to be replaced by ENERPAC original parts only!

Personal protective equipment must be worn when assembling the hydraulic components.

The hydraulic components must be completely assembled before each use.

Pos.	Component	Qty
8	Hydraulic cylinder	1
9	Hydraulic hose	1
10 + 11	Manometer is fitted with a hydraulic hand pump	1

Ensure that there is no oil leakage after the components have been screwed together. Check all screwed connections and couplings for tightness. After pressurisation of the hydraulic system, the components can no longer be tightened by hand.

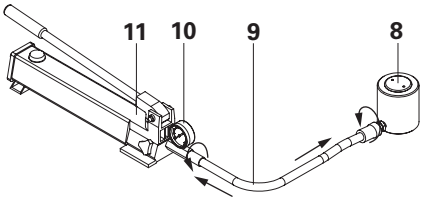

Fig. 2

Procedure:
1. Remove components from the aluminium case.
2. Check for any signs of damage.
3. Screw together the hydraulic hose (9) and hydraulic hand pump (10 + 11).
4. Screw together the hydraulic hose (9) and hydraulic cylinder (8).
5. Check the oil level.
6. Bleed the hydraulic system.

Application

Assembly of the hydraulic components

Topping up the hydraulic oil

Caution

Only top up the oil when the hydraulic cylinder is fully retracted and the hydraulic system is unpressurized! Otherwise the hydraulic system will contain too much oil! This could result in malfunctions!

Wear personal protective equipment when handling hydraulic oil.

Procedure

1. Remove vent and filler cap (11a) from the oil tank of the hand pump (11).
2. Check the oil level by means of the filling mark in the oil tank.
3. Only fill up to the filling mark.
4. Bleed the hydraulic system.
5. Screw on the vent and filler cap (11a).
6. Check hydraulic system for leaks.

Bleeding the hydraulics

Procedure

1. Close drain valve (11b) by turning in a clockwise direction.
2. Position the hand pump at a higher level than the cylinder.
3. Bottom of the hydraulic cylinder (8) must be facing upwards.
4. Operate the hand pump until the cylinder is fully extended.
   (Total length = 179 mm)
5. Open the drain valve by turning it counterclockwise. The air is then pressed into the oil tank of the hand pump.
6. Unscrew vent and filler cap (11a) using a 1/4 turn in a counterclockwise direction in order to let out the air.
7. Close the vent and filler cap by turning in a clockwise direction.
   (Fig. 3)

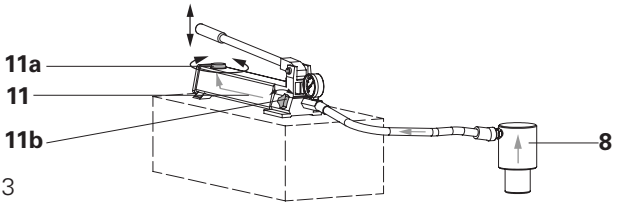

Fig. 3

Application

Maintenance and repairs

General

The Hydraulic Lowering Unit HD is designed for long-term use on construction sites.

In order to maintain the value and operational readiness of the Hydraulic Lowering Unit HD over a long period of time, it is important that it is carefully handled at all times.

Maintenance and repair work on the Lowering Jack HD is to be carried out by PERI personnel only. Only original PERI components may be used.

Maintenance and repair work on the ENERPAC Hydraulic Unit HD is to be carried out exclusively by an authorized ENERPAC Service Centre in the respective region. Only original ENERPAC components may be used.

Drain all of the hydraulic oil every 12 months and fill the pump with clean ENERPAC oil. Carry out the oil change more often if the hydraulic system is used in dirty environments.

Changing the hydraulic oil

Procedure

1. The cylinder (8) must be fully retracted.
2. Open the vent and filler cap (11a) on the oil tank of the hand pump. (Fig. 3)
3. Tilt the hand pump (11).
4. Put used oil in a suitable container.
5. Fill tank with ENERPAC hydraulic oil up to the filling mark.
6. Close vent and filler cap (11a) on the oil tank of the hand pump.
7. If necessary, bleed the system.
8. Dispose of used hydraulic oil in accordance with regulations.

The repair or replacement of worn components is essential if there are visible signs of damage (e.g. wear on the hose, indentations on the cylinder and couplings, etc.).

Lubricating the pump

Depending on the application and frequency, the supporting bolts (11c), the cylinder surface (11d) and lever arm guide (11e) must be lubricated with roller bearing grease. (Fig. 4)

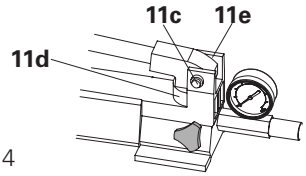

Fig. 4

Application

Installing the hydraulics

Warning
The cylinder must not be used to permanently support loads!

Wear personal protective equipment!

The ENERPAC Hydraulic Unit HD is to be installed only when the shoring system has been completely assembled.

Take into account the Instructions for Assembly and Use for the PERI UP Flex Heavy-Duty Prop HD.

Requirements:
- Set up lowering jack on an even and sufficient load-bearing surface, e.g. for load distribution: steel plate 350 x 350 x 15 mm on Class C 12/15 concrete.
- The ENERPAC Hydraulic Unit HD is assembled correctly.
- Cylinder (8) must be in a perpendicular position, with the piston surface lying completely flat and centered! (Fig. 6)
- The hydraulic hose must not be kinked or bent sharply. (Fig. 5)
- The pump valve (11b) is closed. (Fig. 5a)

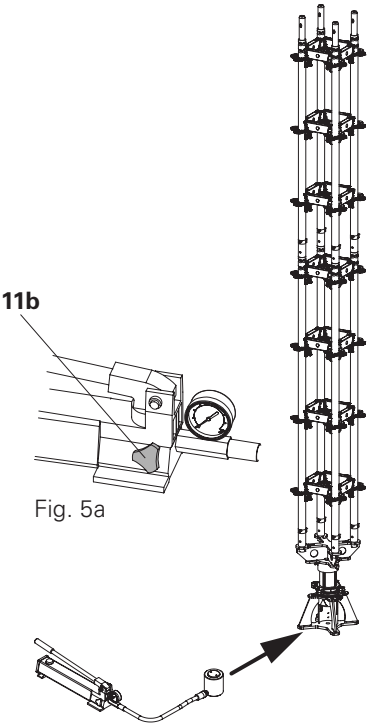

Fig. 5a

Fig. 5

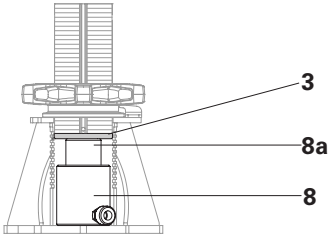

Fig. 6

Application

Load-controlled preloading

Preloading with the Hydraulic Lowering Unit HD
Illustrations without connectors and heavy-duty props!

Warning

- **Before using the Hydraulic Lowering Unit HD, check that all components are properly connected to each other!**
- **Remove or secure any loose components!**
- **Only the operator is allowed to remain under the load!**
- **When working on existing structures, permanently monitor the situation, e.g. cracks, falling building parts, or noises.**
- **If the specified force has been reached, secure with the adjusting nut in order to relieve the load on the cylinder!**
- **Risk of crushing! During operations, keep hands and feet away from the cylinder and Lowering Jack HD in order to prevent injuries!**
- **A project-specific static and preloading plan, in which the pre-stressing force has been determined, is mandatory!**

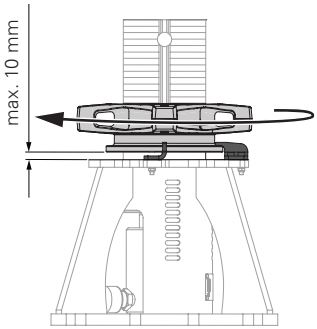

Fig. 7

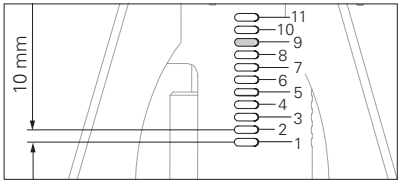

Fig. 7a

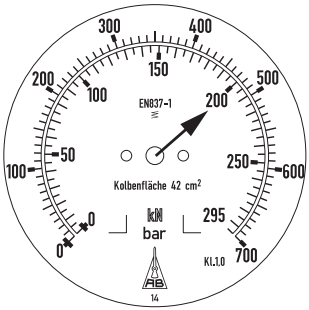

Fig. 8

The pressure piece (3) of the spindle tube is marked in red. The starting position of the pressure piece is centered in slotted hole 9. (Fig. 7a)

Application

Load-controlled preloading

Preloading with the Hydraulic Lowering Unit HD
Illustrations without connectors and heavy-duty props!

The hold-down (5) is only a visual stop, it does not accommodate any forces.

- The prop or main beam area with the Lowering Jack HD is positioned vertically under the structure which is to be supported.
- The bottom edge of the red pressure piece (3) is positioned in the middle of slotted hole 9. (Fig. 10)
- The height of the assembly is set.
- It can be preloaded max. 2 x 10 mm.

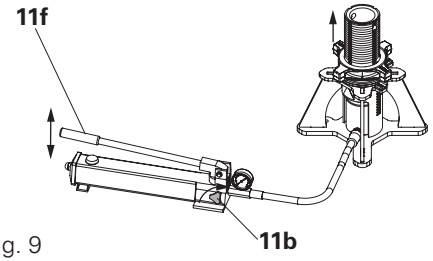

Fig. 9

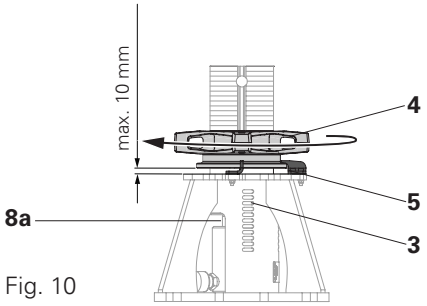

Fig. 10

Application

Load-controlled preloading

Preloading with the Hydraulic Lowering Unit HD

Procedure:

1. Close the pump valve (11b) by turning it clockwise. (Fig. 9)
2. Operate pump lever (11f) until the piston (8a) of the cylinder rests centrally and flush on the red pressure piece (3).
3. Continue to build up pressure until the pre-determined load specification has been reached: see project-specific static and preloading plan. (Fig. 12)
4. Turn adjusting nut (4) downwards in a clockwise direction by hand until the adjusting nut (4) rests on the plate (1a). (Fig. 11)
5. Open the pump valve (11b) and relieve cylinder.

If the force has not been reached, repeat step 3 and then step 4.

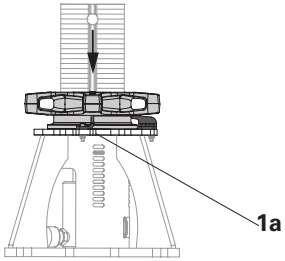

Fig. 11

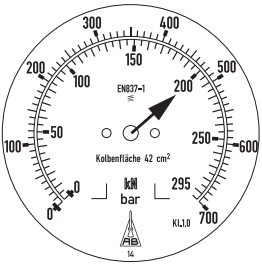

Fig. 12

Application

Load-controlled lowering

Lowering with the Hydraulic Lowering Unit HD

Danger

- **Personal injury and material damage! The lowering procedure only takes place if the concrete has hardened enough and the person in charge has given instructions to do so!**
- **When working on existing structures, constantly check for cracks, falling building parts, or noises etc.!**
- **With a multiple number of props, ensure that all props are lowered uniformly!**
- **Before using the Hydraulic Lowering Unit HD, make sure that all components are properly connected to each other!**

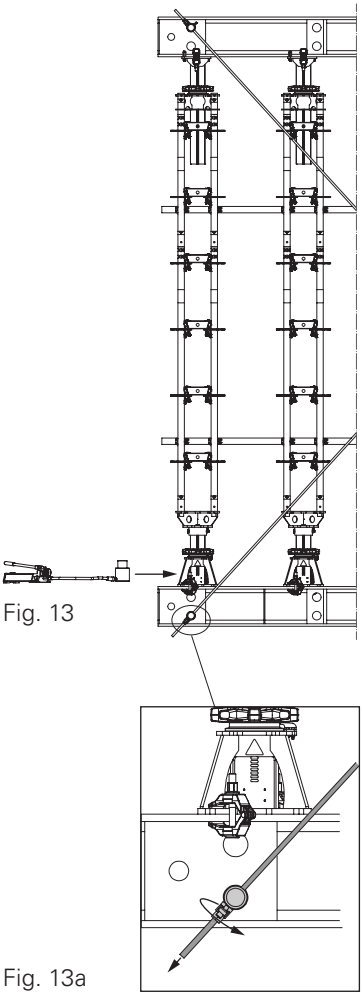

Fig. 13

Fig. 13a

Application

Lowering with the Hydraulic Lowering Unit HD

Danger

- **Only the operator is allowed to remain under the load!**
- **Risk of crushing! During operations, keep hands and feet away from the cylinder and Lowering Jack HD in order to prevent injuries!**
- **A project-specific static and lowering plan is mandatory!**

- When lowering, re-tension the bracing. For this, see the Instructions for Assembly and Use for PERI UP Flex Heavy-Duty Props HD. (Fig. 13a)
- The height is always adjustes via the Head Spindle TR. Refer to the Instructions for Assembly and Use for PERI UP Flex Heavy-Duty Props HD.
- Lowering range per step is limited to max. 10 mm by means of the adjusting nut (4) and hold-down (5). (Fig. 15)
- The hold-down (5) is only a visual stop, it does not accommodate any forces.

Application

Load-controlled lowering

Lowering with the Hydraulic Lowering Unit HD
Illustrations without connectors and heavy-duty props!

Danger
During the lowering of the Hydraulic Lowering Unit HD, ensure that the adjusting nut remains in the same position! Otherwise this will lead to uneven load distribution! A max. of 10 mm per step can be lowered!

Wear personal protective equipment!

Requirements:
- The ENERPAC Hydraulic Unit HD is assembled correctly.
- The cylinder (8) must be in a perpendicular position, flush-fitted and centred!
- The hydraulic hose must not be kinked or bent sharply. (Fig. 14)
- The pump valve (11b) is closed. (Fig. 14)

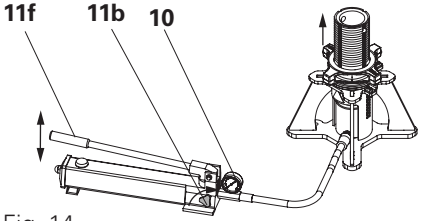

Fig. 14

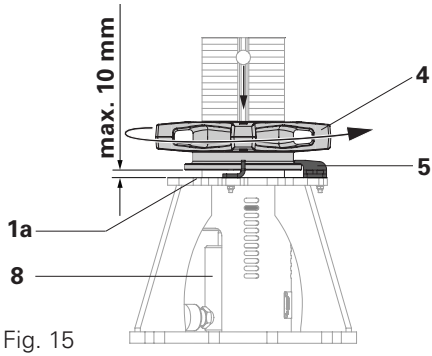

Fig. 15

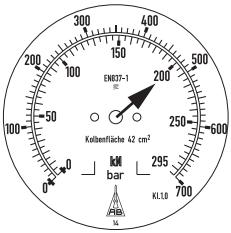

Fig. 16

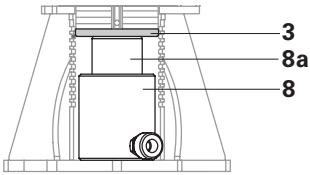

Fig. 17

Application

Load-controlled lowering

Lowering with the Hydraulic Lowering Unit HD

Procedure:

1. Close the pump valve (11b) by turning it clockwise.
2. Operate pump lever (11f) until the piston (8a) of the cylinder rests centrally and flush on the red pressure piece (3).
3. Operate the pump lever (11f) until the adjusting nut (4) is free (1 – 2 pump strokes).
4. Turn the adjusting nut (4) upwards by hand in a counterclockwise direction until the locking nut rests against the hold-down (5). (Fig. 15)
5. Open the pump valve (11b) in a counterclockwise direction and monitor the display (Fig. 16) on the manometer (10).
6. The cylinder retracts and is lowered by a max. of 10 mm together with the prop. (Fig. 15)
7. Close pump valve (11b).
8. Repeat the procedure until the pre-determined load specification of the project-specific static and lowering plan is displayed on the manometer. (Fig. 16)

If the pre-determined load specification has been reached during the lowering procedure:

1. Close the pump valve (11b) by turning it clockwise.
2. Turn adjusting nut (4) until it rests on the plate (1a). (Fig. 15)
3. Open the pump valve (11b) in a counterclockwise direction in order to relieve the load on the cylinder (8).

If the pre-determined load specification is not reached during the lowering procedure, the pre-determined load specification must be preloaded. For this, see the section “load-controlled preloading”.

If the required force is not reached, repeat step 4 and then step 5.

Application

Displacement-controlled lowering

Lowering with the Hydraulic Lowering Unit HD
Illustrations without connectors and heavy-duty props!

Danger
- **Personal injury and material damage! Lowering takes place only if the concrete has hardened enough and the person in charge has given instructions to do so!**
- **With multi-part supports, ensure that all props are lowered uniformly!**
- **Only the operator is allowed to remain under the load!**
- **Risk of crushing! During operations, keep hands and feet away from the cylinder and Lowering Jack HD in order to prevent injuries!**

Wear personal protective equipment!

Displacement-controlled lowering is possible in 10 mm increments. This corresponds to the spacing of the slotted holes in the Lowering Jack HD. (Fig. 18)

Requirements:
- Load-controlled as in the lowering procedure.

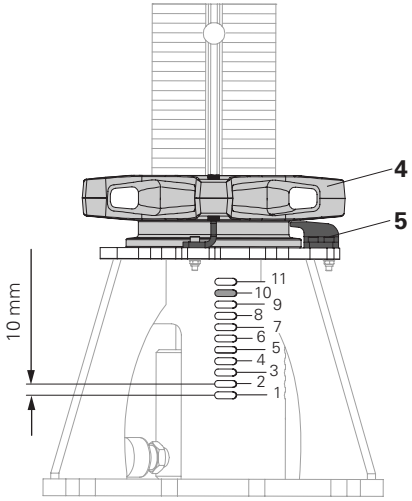

Fig. 18

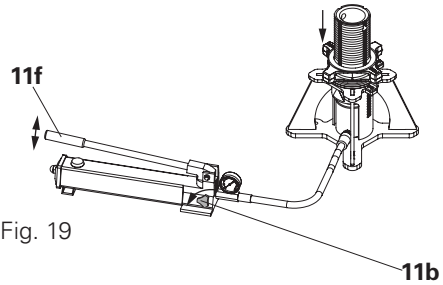

Fig. 19

The shoring is always lowered via the head spindle. Refer to the Instructions for Assembly and Use for PERI UP Flex Heavy-Duty Props HD.

Application

Displacement-controlled lowering

Lowering with the Hydraulic Lowering Unit HD

Danger
During lowering operations with the Hydraulic Unit HD, ensure that the adjusting nut remains in the same position! Otherwise this will lead to uneven load distribution! A max. of 10 mm per step can be lowered!

Procedure:

1. Operate pump lever (11f) until the piston of the cylinder (8a) rests centrally and flush on the red pressure piece (3). (Fig. 20)
2. Operate the pump lever (11f) until the adjusting nut (4) is free (1 - 2 pump strokes).
3. Turn the adjusting nut (4) upwards by hand in a counterclockwise direction until the locking nut rests against the hold-down (5). (Fig. 21)
4. Open the pump valve (11b) and monitor the position of the red pressure plate (3). (Fig. 20 + 21)
5. The cylinder retracts and is lowered by a max. of 10 mm together with the prop. (Fig. 21)
6. Close pump valve (11b).
7. Repeat procedures 3 and 4 until the prop or main beam area has been lowered by the predetermined dimension.

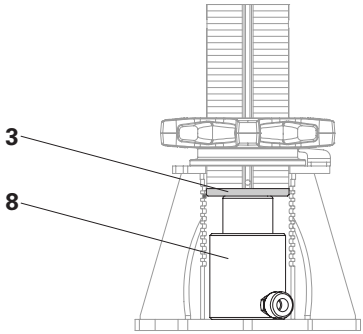

Fig. 20

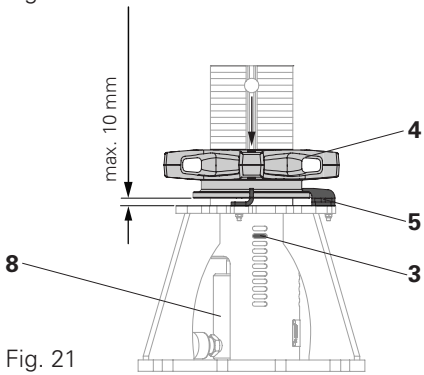

Fig. 21

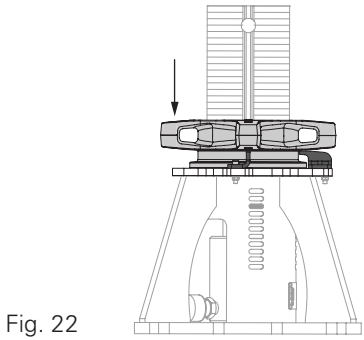

Fig. 22

Application

Assembly of the Connector UJC

Caution
The assembly must be secured against tipping!

Wear personal protective equipment!

- Starting position: extend the spindle tube (2) so that the red pressure piece is visible in the centre of slotted hole 9.
- Due to the spherical piece (14d), inclination compensation of up to 2° is possible. (Fig. 24)

Procedure:

1. Place Connector UJC (14) with connecting bolts (14a) on the spindle tube (2). (Fig. 23a + 23b)
2. Loosen cotter pin (14b) and remove plate (14c). (Fig. 23c)
3. Remove connecting bolts (14a). Connector UJC (14) slides downwards and the spherical piece (14d) is positioned on the spindle tube (2). (Fig. 23c)
4. Insert connecting bolts into the Connector UJC. (Fig. 23d)
5. Attach plate and secure by means of cotter pins. (Fig. 23d)

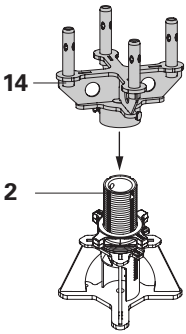

Fig. 23a

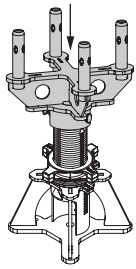
Fig. 23b

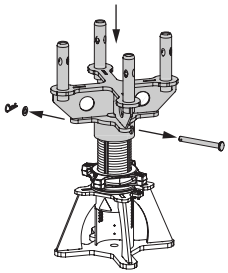
Fig. 23c

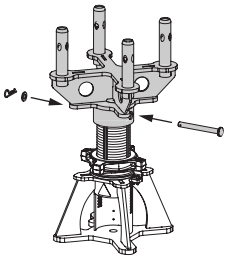
Fig. 23d

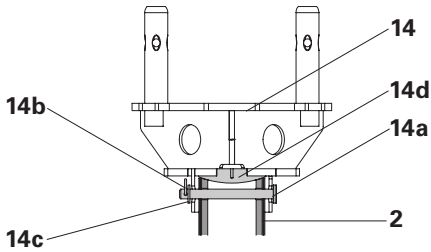

Fig. 24

Application

Dismantling

ENERPAC Hydraulics
Illustrations without connectors and heavy-duty props!

Warning
Hydraulics must be depressurized!

Wear personal protective equipment!

Procedure:

1. Turn pump valve (11b) in a counter-clockwise direction, completely retract the cylinder (8). System is depressurized. (Fig. 27)
2. Close the pump valve (11b) by turning it clockwise.
3. Monitor the display on the manometer (10).
4. Remove cylinder (8) from the Lowering Jack HD. (Fig. 27)
5. Unscrew hydraulic components, hose, cylinder and hand pump, fit dust protection caps. (Fig. 28)
6. Correctly store hydraulic components in the aluminium case.
7. Remove traces of oil accordingly.

Check components for signs of damage! Damaged components must be replaced immediately!

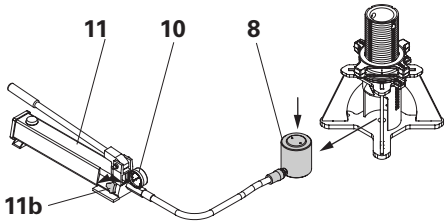

Fig. 27

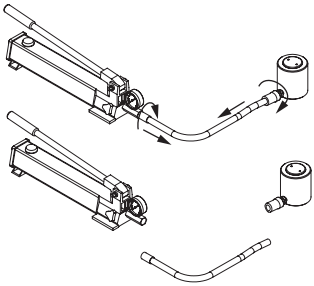

Fig. 28

Application

Dismantling

Connector UJC
Illustrations without heavy-duty props!

Warning
The spherical piece has sharp edges which can cause cuts to hands and fingers!
Wear suitable safety gloves!

Wear personal protective equipment!

Procedure:
1. Remove cotter pins (14b), plate (14c) and connecting bolts (14a).
2. Remove Connector UJC (14) upwards by hand.
3. Remove spherical piece (14d) from the spindle tube (2) in case it has been released. (Fig. 29)
4. Turn Connector UJC (14) and correctly position the spherical piece (14d). (Fig. 30)
5. Re-attach connecting bolts, plate and cotter pins. (Fig. 30)

Check components for signs of damage! Damaged components must be replaced immediately!

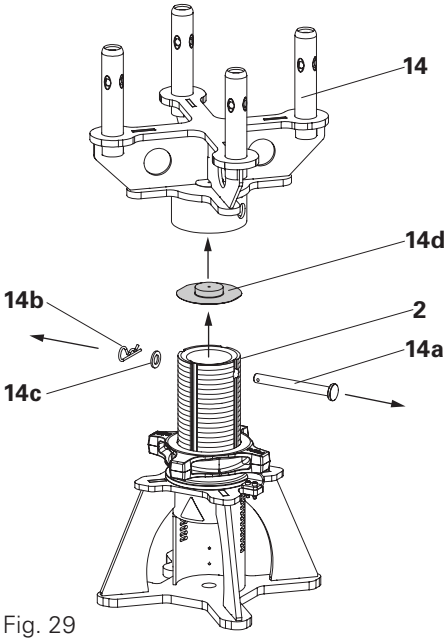

Fig. 29

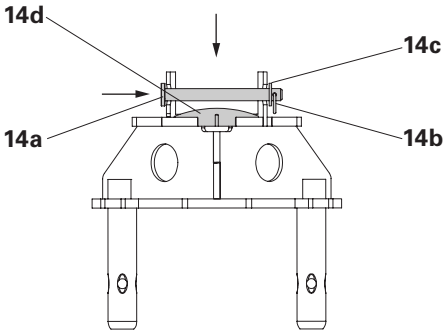

Fig. 30

Application

Troubleshooting

Malfunction	Possible cause	Remedial action
Cylinder cannot be extended, extends too slowly, or stops during the start-up.	Oil level is too low in the pump.	Top up oil in accordance with the section "maintenance and repair".
	Drain valve open.	Close drain valve.
	Loose connection on the hydraulic pump.	Check that all couplers have been completely tightened.
	Load too heavy.	Do not try to lift more than the nominal load of 200 kN.
	Trapped air in the system.	Bleed air in accordance with the instructions provided in the section ”bleeding the hydraulics“.
	Cylinder piston is stuck.	Check the cylinder for signs of damage. Arrange to have the cylinder serviced by a certified hydraulics technician.

Malfunction	Possible cause	Remedial action
Cylinder is extended but does not withstand the pressure.	Leaky connection.	Check whether all connections are tight and leak-proof. If yes, depressurize the system.
	Defective seal.	Locate leakage and then arrange to have the connectors and couplings serviced by a qualified hydraulics technician.
	Internal leakage in the pump.	Arrange to have the pump serviced by a qualified hydraulics technician.

Troubleshooting

Malfunction	Possible cause	Remedial action
Cylinder does not retract, only partly retracts, or retracts much slower than usual.	Drain valve closed.	Open drain valve.
	Too much oil in the pump tank.	Reduce oil level by draining oil tank down to maximum level.
	Loose hydraulic coupling.	Check that all couplers have been completely tightened.
	Trapped air in the system.	Remove air in accordance with the instructions provided in the relevant section of these Instructions for Use. Bleed the hydraulic system.
	Return spring of the cylinder is broken, or there is other damage to the cylinder.	Arrange to have the cylinder serviced by a qualified hydraulics technician.

Components

Item no.	Weight kg	
126436	21.400	**Lowering Jack HD** For the release of high loads up to 200 kN. Displacement- and load-controlled lowering as well as prestressing of the support. **Note** Loads > 50 kN to be released with the Hydraulic Unit HD.

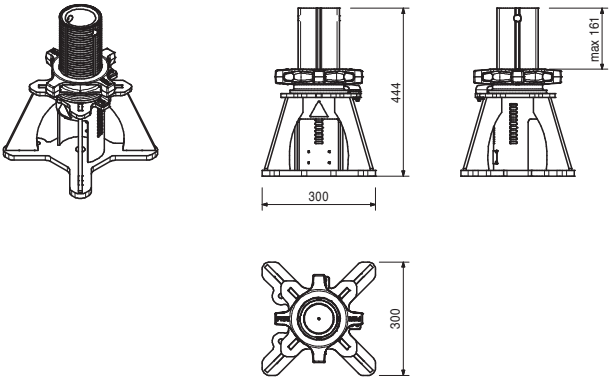

		Accessories
126438	12,900	**Hydraulic Unit HD**
126437	12,800	**Connector UJC**

126437	12.800	**Connector UJC** For connecting the standards UVR in increments of 25 x 25 cm. Can be pivoted up to 2° on all sides.

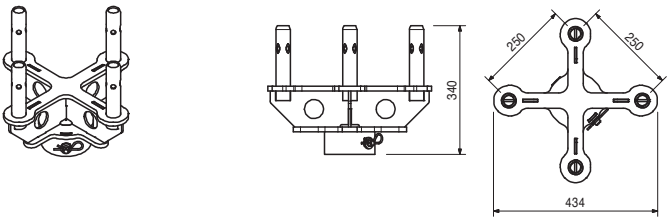

126438	12.900	**Hydraulic Unit HD** Bearing capacity up to 200 kN (to be read directly on the manometer). Cylinder stroke up to 62 mm. **Note** Max. 1 pc. per tower! 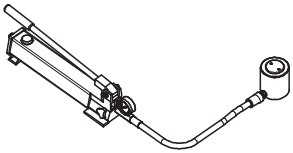

EC Declaration of Conformity

EG - Konformitätserklärung

im Sinne der EG-Richtlinie 2006/42/EG
Anhang II,1.A

In der Gemeinschaft ansässige Person, die bevollmächtigt ist, die technischen Unterlagen zusammenzustellen:

Dipl.-Ing. Rainer Bolz
PERI GmbH
Rudolf-Diesel-Straße 19
89259 Weißenhorn

Beschreibung und Identifizierung der Maschine:

Produktgruppe:	Traggerüst
Typ:	Absenkeinheit
Artikel-Nr.:	126436 + 126438
Handels-Bez.:	Hydraulische Absenkeinheit HD

Es wird ausdrücklich erklärt, dass die Maschine allen einschlägigen Bestimmungen der folgenden EG-Richtlinien entspricht:

EG Maschinenrichtlinie 2006/42/EG

Fundstelle der angewandten harmonischen Normen entsprechend Artikel 7, Absatz 2:

EN 349:1993+A1:2008
EN 12100 : 2011-03
EN 1494:2000+A1:2008

Weißenhorn, 13.02.2014

Hersteller
PERI GmbH
Postfach 1264
89259 Weißenhorn

Leitung Produktentwicklung

Dipl.-Ing. Rainer Bolz
PERI GmbH

EC Declaration of Conformity

This document is a translation into
English from the German original.

EC - declarartion of conformity

according to the EU Machinery Directive 2006/42/EC
Annex II, 1.A

Person residing within the Community authorised to compile the relevant technical documentation:

Dipl.-Ing. Rainer Bolz
PERI GmbH
Rudolf-Diesel-Strasse 19
89259 Weissenhorn

Description and identification of the machinery:

Product Group:	Falsework
Typ:	Lowering Unit
Article-No.:	126436 + 126438
Commercial Designation:	Hydraulic Lowering Unit HD

It is expressly declared that the machinery fulfils all relevant provisions of the following EU Directives:

European Directive On Machinery 2006/42/EC

Reference to the harmonised standards used, as referred to in Article 7, Annex 2:

EN 349:1993+A1:2008
EN 12100 : 2011-03
EN 1494:2000+A1:2008

Weissenhorn, 13.02.2014

Manufacturer
PERI GmbH
P. O. Box 1264
89259 Weissenhorn

Head of Product Development

Dipl.-Ing.Rainer Bolz
PERI GmbH

The optimal System for every Project and every Requirement

Wall Formwork

Column Formwork

Slab Formwork

Climbing Systems

Bridge Formwork

Tunnel Formwork

Shoring Systems

Construction Scaffold

Facade Scaffold

Industrial Scaffold

Access

Protection Scaffold

Safety Systems

System-Independent Accessories

Services

PERI GmbH
Formwork Scaffolding Engineering
Rudolf-Diesel-Strasse 19
89264 Weissenhorn
Germany
Tel. +49 (0)7309.950-0
Fax +49 (0)7309.951-0
info@peri.com
www.peri.com

DE en 12 | 2017 3ma 793523 © PERI GmbH