HD 200 Heavy-Duty Prop
Shoring

Instructions for Assembly and Use – Standard Configuration

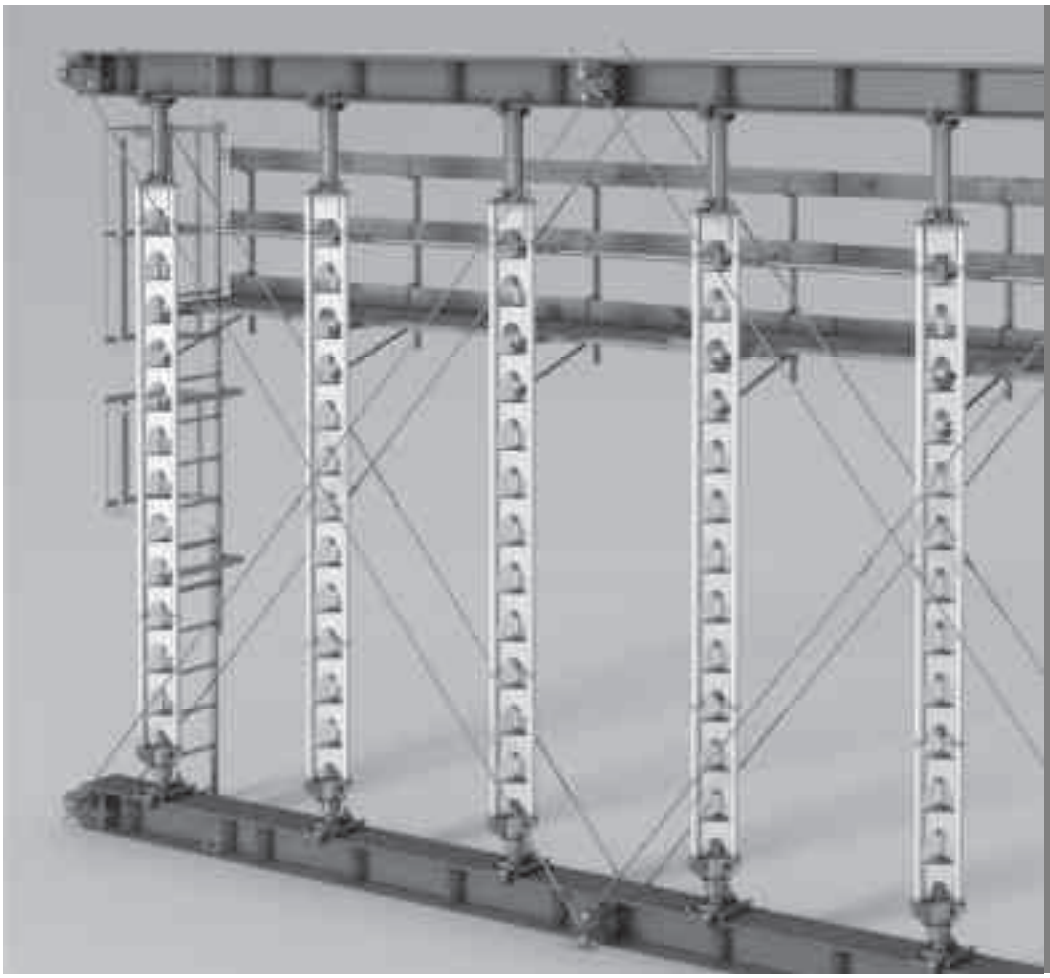

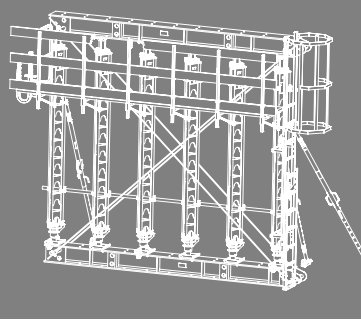

Issue 01 | 2017

Content

PERI

Overview
Main components 1
Key 2
Presentational reference 2

Introduction
Target groups 3
Additional technical documentation 3
Intended use 4
Instructions on use 4
Cleaning and maintenance instructions 5

Safety instructions
Cross-system 6
System-specific 7
Storage and transportation 7
General 7

A Standard configuration
A1 Pre-assembly
Prop Sections HDS, HDSS 8
Head Spindle HDK 45 9
Lowering Device HDA 10
Shear Pin HDA 11
Wing Nut Spanner HD 11

A2 Horizontal assembly of the Main Beam Frame
Main Beam HDT 12
HD Props 13
Diagonal bracing 14
Scaffold tubes as a dismantling aid 14
Working platform 15
Ladder access 16
Push-Pull Props 17
Main Beam Frame 17

A3 Vertical assembly of the Main Beam Frame
Main Beam HDT as Base Beam 18
Primary props 18
Intermediate props 19
Main Beam HDT as Top Beam 20
Diagonal bracing 21

A4 Vertical dismantling of the Main Beam Frame
Relieving the Main Beam Frame 22
Dismantling of the longitudinal beam 23
Dismantling of non-parallel main beams 24
Inclined main beams. 24
Vertical dismantling of the Main Beam Frame
without working platform 25
Dismantling of the Main Beam HDT 25
Dismantling of the HD Props 26
Dismantling of the primary props 26

B Application
B1 Loads and bracing
Load application 27
Horizontal loads 27

B2 Variants
Free-standing Main Beam Frames 29
Individual props 30
Main Beam Frames without bottom
Main Beam HDT 30
Main Beam Frames of two or more
Individual Main Beam Frames 30

B3 Inclined Compression Head
Individual props up to 6.0 m 31
Individual props 6.0 m to 12.0 m 32
Prop assemblies up to 12.0 m 33
Bearing force for the intermediate support centrally arranged 35
Individual props 12.0 m to 18.0 m 37
Prop assemblies up to 18.0 m 38
Bearing force for intermediate support in the third points 40
Load transfer via the Base Plate 42

Tables
Tables HD 200 48

Components
Components 50

Overview

Main components

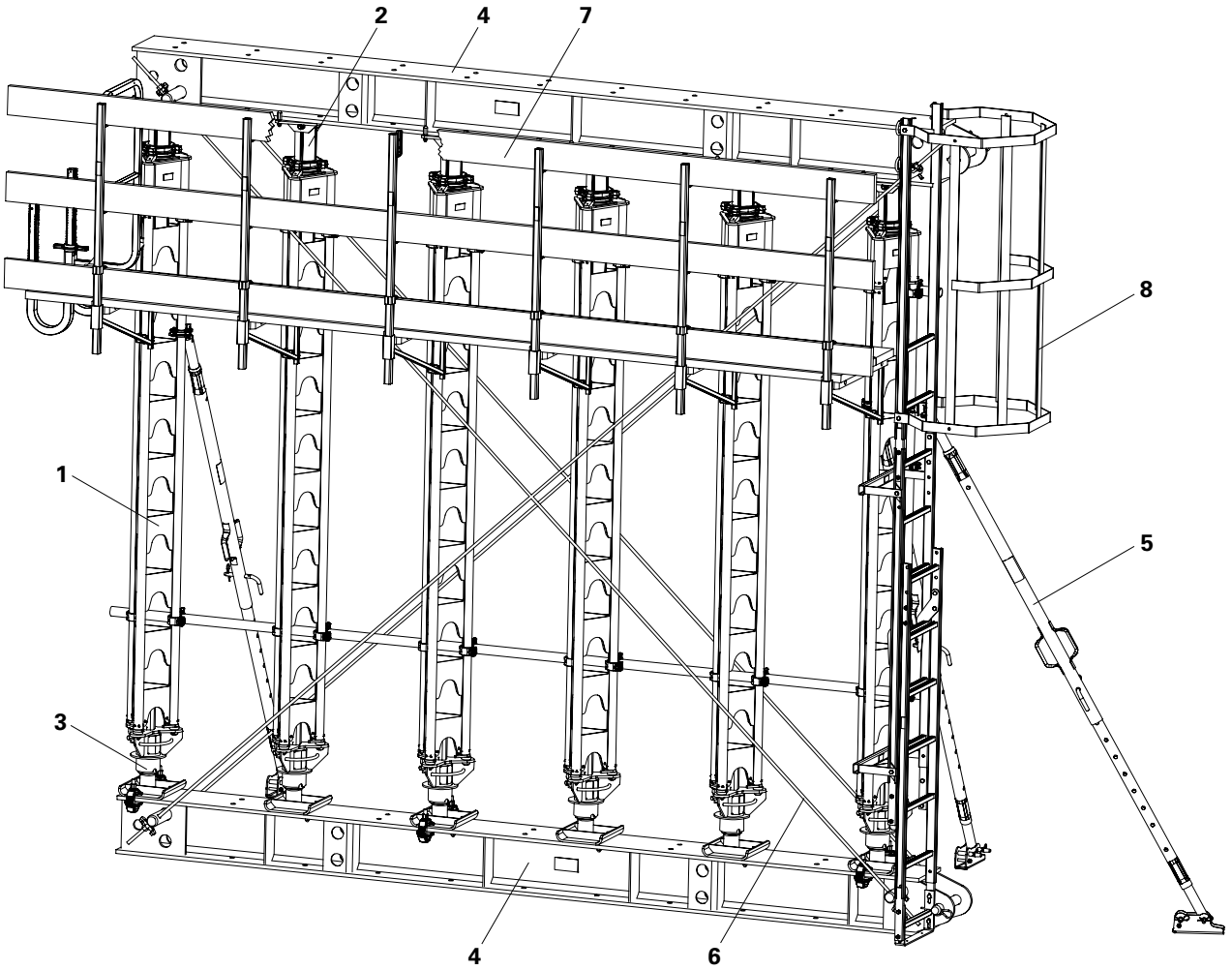

1 Prop Section HDS / HDSS
2 Head Spindle HDK
3 Lowering Device HDA
4 Main Beam HDT as base and top beam
5 Push-Pull Prop as assembly aid
6 Diagonal bracing
7 Working platform
8 Ladder access

Overview

Key

Pictogram | Definition

Safety instructions

Note

Load-bearing point

Visual check

Dimension specifications
Dimensions are usually given in cm. Other measurement units, e.g. m, are shown in the illustrations.

Conventions
- Instructions are numbered with: 1. ....., 2. ....., 3. .....
- The result of an instruction is shown by: →
- Position numbers are clearly provided for the individual components and are given in the drawing, e.g. **1**, in the text in brackets, for example (1).
- Multiple position numbers, i.e. alternative components, are represented with a slash, e.g. **1/2**.

Arrows

Arrow representing an action

Arrow representing a reaction of an action*

Forces

* if not identical to the action arrow.

Presentational reference

The illustration on the front cover of these instructions is understood to be a system representation only. The assembly steps presented in these Instructions for Assembly and Use are shown in the form of examples with only one component size. They are valid accordingly for all component sizes contained in the standard configuration.

For a better understanding, detailed illustrations are partly incomplete. The safety installations which have possibly not been included in these detailed drawings must nevertheless still be available.

Target groups

Contractors
These Instructions for Assembly and Use are designed for contractors who use the scaffolds either for
- assembling, modifying and dismantling, or
- use them, e.g. for concreting, or
- who have them used, e.g. for forming operations.

Construction site coordinator
The Safety and Health Coordinator*
- is appointed by the client,
- must identify potential hazards during the planning phase,
- determines measures that provide protection against risks,
- creates a safety and health plan,
- coordinates the protective measures for the contractor and site personnel so that they do not endanger each other,
- monitors compliance with the protective measures.

Competent personnel
Due to the specialist knowledge gained from professional training, work experience, and recent professional activity, the competent person has a reliable understanding of safety-related issues and can correctly carry out inspections. Depending on the complexity of the test to be undertaken, e.g. scope of testing, type of testing or the use of a certain measuring device, a range of specialist knowledge is necessary.

Qualified persons
The scaffolding may only be assembled, modified or dismantled by personnel who are suitably qualified to do so. For the work to be carried out, the qualified persons must have received instructions** covering at least the following points:
- Explanation of the plan for the assembly, modification or dismantling of the scaffolding in an understandable form and language.
- Description of the measures in order to safely assemble, modify or dismantle the scaffolding.
- Designation of the preventive measures to avoid the risk of persons and objects falling.
- Designation of the safety precautions in the event of changing weather conditions which could adversely affect the safety of the scaffolding as well as the personnel concerned.
- Details regarding the permissible loads.
- Description of any other risks that are associated with the assembly, modification or dismantling procedures.

- **In other countries, ensure that the relevant national guidelines and regulations in the respective current version are complied with!**
- **If no country-specific regulations are available, it is recommended to proceed according to German rules and regulations.**

* Valid in Germany: Regulations for Occupational Health and Safety on Construction Sites 30 (RAB 30)

** Instructions are given by the contractor himself or a competent person selected by him.

Additional technical documentation

- Brochures
  - HD 200 Brochure
  - Push-Pull Props
- Type Test
  - HD 200 Type Test
- Tables
  - PERI Design Tables
- Instructions for Use
  - Pallets and Stacking Devices
  - Lowering Device
- Approval
  - Main Beam Clamp HD 70
- Data Sheet
  - Anchor Bolt PERI 14/20 x 130
- Instructions for Assembly and Use
  - Push-Pull Props

Introduction

Intended use

Product description
PERI products have been designed for exclusive use in the industrial and commercial sectors by qualified personnel only.

These Instructions for Assembly and Use serve as a basis for the project-related risk assessment and instructions for the provision and use of the system by the contractor (user). However, they do not replace them.

Only PERI original parts may be used. The use of other products and spare parts represents a misapplication with associated safety risks.

The material is to be regularly checked for any signs of damage particularly before any assembly takes place. Damaged components must be replaced immediately on site and may no longer be used.

Changes to PERI components are not permitted and represent a misapplication with associated safety risks.

Safety instructions and permissible loads must be observed at all times. Components provided by the contractor must conform with the characteristics required in these Instructions for Assembly and Use as well as with all valid construction guidelines and standards.

In particular, the following applies if nothing else is specified:
- timber components: Strength Class C24 for Solid Wood EN 338.
- scaffold tubes: galvanised steel tubes with minimum dimensions of Ø 48.3 x 3.2 mm according to EN 12811-1:2003 4.2.1.2.
- scaffold tube couplings according to EN 74.

Deviations from the standard configuration may only be carried out after a separate risk assessment has been completed by the contractor (user). On this basis, appropriate measures for the working safety and stability are to be implemented.

Project-specific static calculations in which the force to be applied has been determined as well as a lowering plan must be available.

Features
The HD 200 Heavy-Duty Prop is a component for use in high load-carrying shoring systems. It is used both as an individual prop or as part of a system in the form of a main beam frame.

Assembly normally takes place in a horizontal position. For bracing main beam frames and fixing of diagonal braces during assembly, scaffold tubes ø 48 and couplers are used.

Prop Sections HDS/HDSS are available in 5 different lengths (3 x aluminium, 2 x steel). With integrated chord couplings for easy assembly without tools.

Head spindle with head plate that can be tilted up to 3°.

Lowering Device with 10 cm lowering range for easy lowering under full load.

Technical data
Permissible prop load ≤ 200 kN.
See Type Test and PERI Design Tables.

The following maximum system heights have been verified in the type test:
- Steel Prop HDSS: 12.80 m,
- Aluminium Prop HDS: 10.10 m.

These heights include the dimensions of the PERI Main Beam HDT.

Instructions on use

General
The use in a way not intended, deviating from the standard configuration or the intended use according to the Instructions for Assembly and Use, represents a misapplication with a potential safety risk, e.g. risk of falling.

Cleaning and maintenance instructions

In order to maintain the value and operational readiness of the PERI products over the long term, clean the elements after each use.

Some repair work may also be inevitable due to the tough working conditions. The following points should help to keep cleaning and maintenance costs as low as possible.

Do not clean powder-coated or galvanized components with steel brushes or metal scrapers.

Mechanical components, e.g. spindles, must be cleaned of dirt or concrete residue before and after use, and then greased with a suitable lubricant.

Provide suitable support for the components during cleaning so that no unintentional change in their position is possible.

Do not clean components suspended on a crane.

Any repairs to PERI products are to be carried out by PERI qualified personnel only.

Cross-system

General
The contractor must ensure that the Instructions for Assembly and Use supplied by PERI are available at all times and understood by the site personnel.

These Instructions for Assembly and Use can be used as the basis for creating a risk assessment. The risk assessment is compiled by the contractor. However, the Instructions for Assembly and Use do not replace the risk assessment!

Always take into consideration and comply with the safety instructions and permissible loads.

For the application and inspection of PERI products, the current safety regulations and guidelines valid in the respective countries must be observed.

Materials and working areas are to be inspected on a regular basis, especially before each use and assembly, for:
- signs of damage,
- stability and
- function.

Damaged components must be exchanged immediately on site and may no longer be used.

Safety components are to be removed only when they are no longer required.

Components provided by the contractor must conform with the characteristics required in these Instructions for Assembly and Use as well as all valid construction guidelines and standards. Unless otherwise indicated, this applies in particular to:
- Timber components: Strength Class C24 for Solid Wood according to EN 338.
- Scaffold tubes: galvanised steel tubes with minimum dimensions of Ø 48.3 x 3.2 mm according to EN 12811-1:2003 4.2.1.2.
- Scaffold tube couplings according to EN 74.

Deviations from the standard configuration are only permitted after a further risk assessment has been carried out by the contractor.

On the basis of this risk assessment, appropriate measures for working and operational safety as well as stability are to be determined.

Corresponding proof of stability can be provided by PERI on request if the risk assessment and resulting measures to be implemented are made available.

Before and after exceptional occurrences that may have an adverse effect regarding the safety of the scaffolding system, the contractor must immediately
- create an additional risk assessment, with appropriate measures for ensuring the stability of the formwork system being carried out based on the results,
- and arrange for an extraordinary inspection by a competent person. The aim of this inspection is to identify and rectify any damage in good time in order to guarantee the safe use of the scaffolding system.

Exceptional occurrences can include:
- accidents,
- longer periods of non-use,
- natural events, e.g. heavy rainfall, icing, heavy snowfall, storms or earthquakes.

Assembly, modification and dismantling work
Assembly, modification or dismantling of scaffolds may only be carried out by qualified specialists under the supervision of a competent person. The qualified persons must have received appropriate training for the work to be carried out with regard to specific risks and dangers.

On the basis of the risk assessment and Instructions for Assembly and Use, the contractor must create installation instructions in order to ensure safe assembly, modification and dismantling of the scaffolding system.

Before initial use, the safe functioning of the scaffold must be checked by a competent person. The results of the inspection must be documented in an inspection record.

The contractor must ensure that the personal protective equipment required for the assembly, modification or dismantling of the system, e.g.
- safety helmet,
- safety shoes,
- safety gloves,
- safety glasses,

is available and used as intended.

If personal protective equipment against falling (PPE) is required or specified in local regulations, the contractor must determine appropriate attachment points on the basis of the risk assessment.
The personal protective equipment against falling to be used is determined by the contractor.

The contractor must:
- provide safe working areas for site personnel which are to be reached through the provision of safe access ways. Areas of risk must be cordoned off and clearly marked.
- ensure the stability during all stages of construction, in particular during assembly, modification and dismantling operations.
- ensure and prove that all loads can be safely transferred.

Utilization
Every contractor who uses or allows the scaffolding system or sections of the scaffolding system to be used, has the responsibility for ensuring that the equipment is in good condition.

If the scaffolding system is used successively or at the same time by several contractors, the health and safety coordinator must point out any possible mutual hazards, and all work must be then coordinated.

System-specific

Retract components only when the concrete has sufficiently hardened and the person in charge has given the go-ahead for striking to take place.

Anchoring is to take place only if the anchorage has sufficient concrete strength.

After exceptional occurrences or long periods of downtime where the formwork and shoring are being used, the unit and its components are to be checked regarding the stability and function.

Storage and transportation

Store and transport components ensuring that no unintentional change in their position is possible. Detach lifting accessories and slings from the lowered components only if they are in a stable position and no unintentional change is possible.

Do not drop the components.

Use PERI lifting accessories and slings as well as only those load-bearing points provided on the component.

During the moving procedure
- ensure that components are picked up and set down so that unintentional falling over, falling apart, sliding, falling down or rolling is avoided.
- no persons are allowed to remain under the suspended load.

Always guide pre-assembled scaffolding bays, scaffolding units or scaffolding sections with ropes when moving them by crane.

The access areas on the jobsite must be free of obstacles and tripping hazards as well as being slip-resistant.

For transportation, the surface used must have sufficient load-bearing capacity.

Use original PERI storage and transport systems, e.g. crate pallets, pallets or stacking devices.

General

The illustration on the cover of this brochure is a system visualisation.
The assemblies shown in these PERI Instructions for Assembly and Use are only examples which feature only one component size. They are valid accordingly for all component sizes contained in the standard configuration.

Prop Sections HDS, HDSS

Connecting

1. Place prop sections (1) on timbers. Chord couplings (1.1) have no contact with timbers. (Fig. A1.01)
2. Open chord couplings:
   – press down on safety hook (1.2).
   – turn locking mechanism (1.3) by 90°.
   – release safety hook and the lock snaps into position in the notch (1.4).(Fig. A1.01a)
3. Insert hammer head pieces into the ends of the next prop section. (Fig. A1.02)
4. Close chord couplings: turn back locking mechanism by 90° until safety hook locks into the notch (1.5). (Fig. A1.02a)

The end of the locking mechanism runs parallel to the side wall of the prop section.

Repeat procedure until required height is reached.

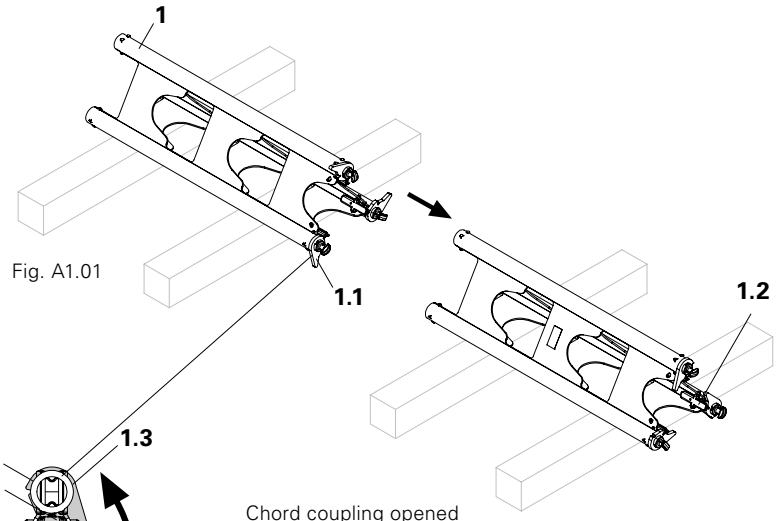

Fig. A1.01

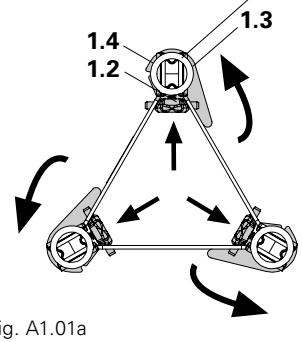

Fig. A1.01a

Chord coupling opened

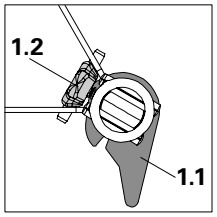

Fig. A1.01b

Chord coupling closed

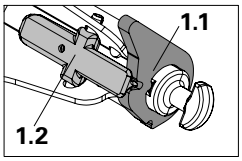

Fig. A1.01c

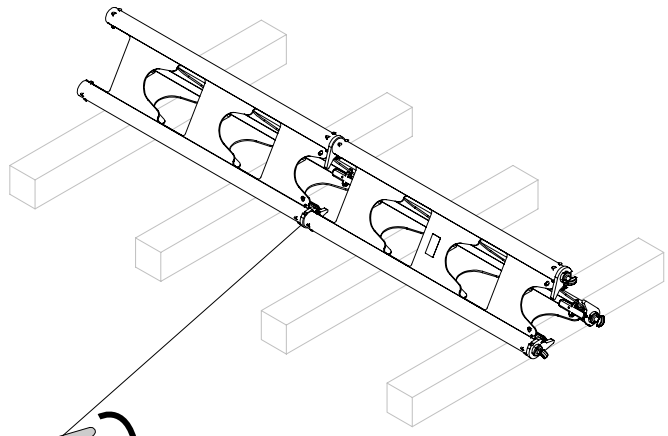

Fig. A1.02

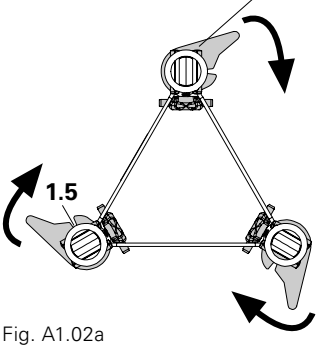

Fig. A1.02a

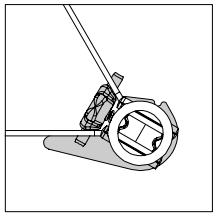

Chord coupling closed

Fig. A1.02b

Head Spindle HDK 45

Assembly

1. Assemble Head Spindle (2) with chord couplings (1.1) to prop segment (1). (Fig. A1.03)
2. Use adjustable wing nut (2.1) to determine the prop length. Usable spindle length = 45 cm.

Visual check of chord couplings.

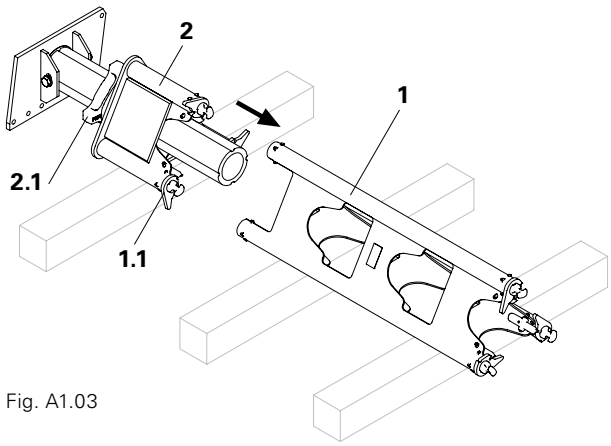

Fig. A1.03

For use in main beam frames

1. Fix two Centering Bolts HD M12 (2.2) (SW 19) to the articulated head plate (2.3) by means of hex. nuts. The hole spacing for the mounting holes on the Main Beam HDT (4) is 400 mm.
2. Mounting variants:
   – Positioning the Centering Bolts (2.2) of the articulated head plate (2.3) in the Main Beam HDT system holes. (Fig. A1.04a)
   – Positioning the Centering Bolts of the articulated head plate laterally to the Main Beam HDT.
   → Flexible grid. (Fig. A1.04b)

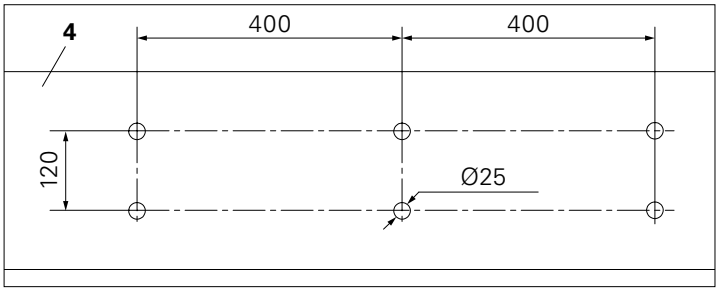

Fig. A1.04

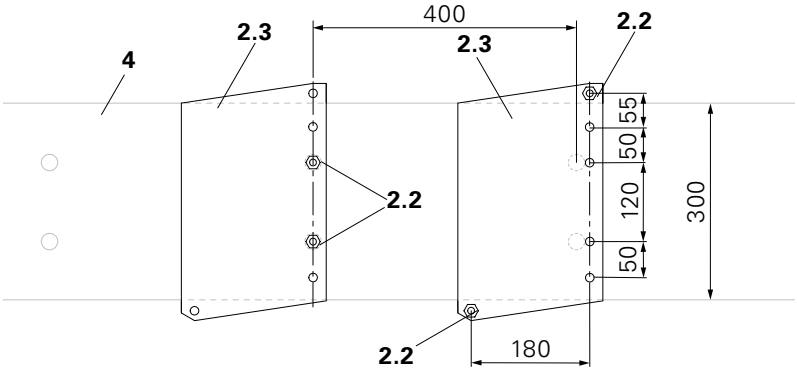

Fig. A1.04a Fig. A1.04b

The articulated head plate is tiltable in one direction.

– Tilting direction must be in the direction of the main beam.
– The axis (2.4) of the bolt (2.5) runs vertically to the main beam axis.
– The articulated head plate (2.3) of the Head Spindle can be tilted on the bolt (2.5) ± 3°.(Fig. A1.05)

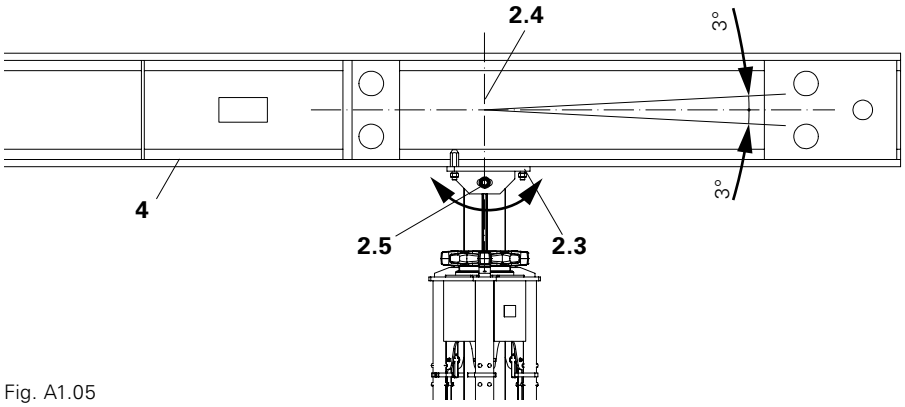

Fig. A1.05

Lowering Device HDA

Permissible load 200 kN.

Preparation

1. Grease lubricating nipple (3.1) on Lowering Device (3) before every use with high-grade grease, e.g. AVIA LITH-2-F. When used under water, also grease after dismantling. (Fig. A1.06)
2. Fully extend Lowering Device with hexagonal driving bolt (3.2), SW 19. Do not break the Shear Pin (limit stop). (Fig. A1.06)

Only extend Lowering Device when unloaded because Shear Pin breaks at approx. 80 kN prop load!

– Switch off roto hammer – otherwise Lowering Device will be destroyed! (Fig. A1.06)
– Base Plate on Lowering Device can be inclined by 3° on all sides.
– The height is always adjusted via the Head Spindle.

Assembly

1. Mount on bottom prop section using the chord couplings. (Fig. A1.07)
2. When used in main beam frame, fix two Centering Bolts M12 (2.2) with hex. nuts SW 19 to the Base Plate. (Fig. A1.07a)

Visual check of the chord couplings.

Alternatively

The Base Adapter HD (29) is used:

– for small loads if striking is possible via the Head Spindle.
– if the Main Beam HDT is used as a basic beam with carriage. (See chapter on Wing Nut Spanner HD)

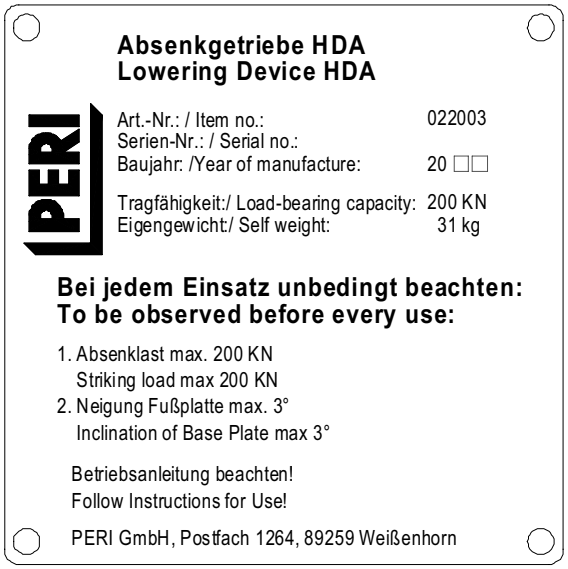

Fig. A1.06a

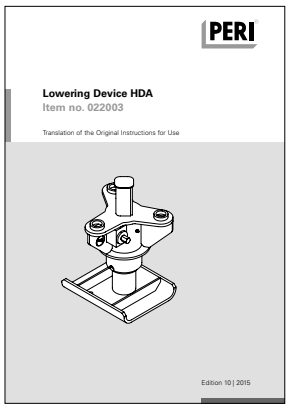

Fig. A1.06b

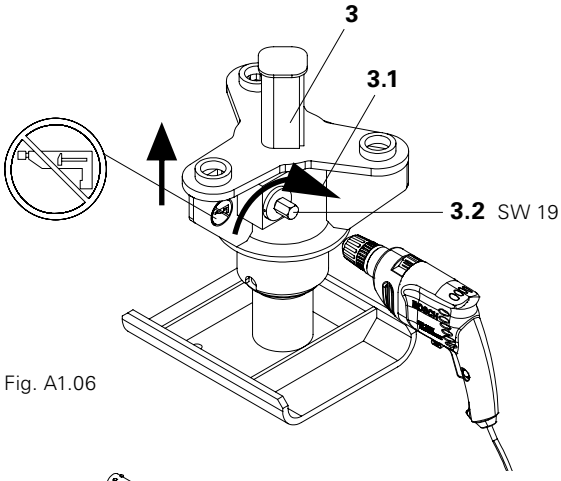

Fig. A1.06

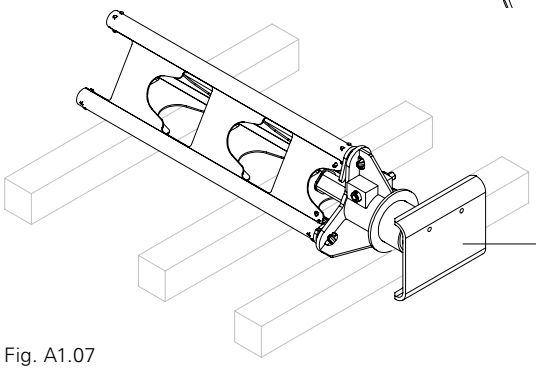

Fig. A1.07

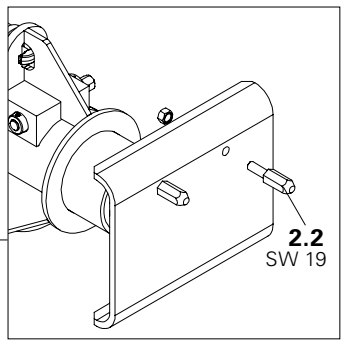

Fig. A1.07a

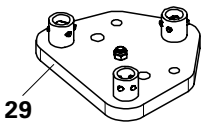

Fig. A1.08

Shear Pin HDA

Hand and eye injuries!When dismantling the Shear Pin, personal protective equipment must be worn:
– gloves
– safety glasses

The prop height remains unchanged while changing the Shear Pin, also when under load.

Required components:

21	Centre punch 2.5 mm	1x
3.6	Shear Pin (Item no. 022018)	1x

Changing the Shear Pin
1. Remove Shear Pin (3.6) in a downwards direction with the centre punch (21) 2.5 mm.
2. Flush fit new Shear Pin. (Fig. A1.09)

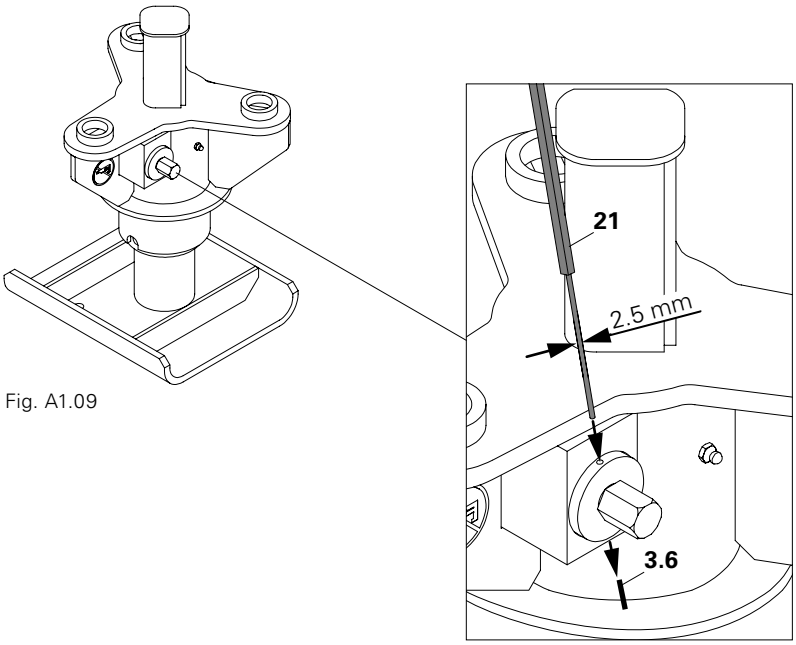

Fig. A1.09

Fig. A1.09a

Wing Nut Spanner HD

The Wing Nut Spanner HD is used to release the Compression Brace Spindle HD, Head Spindle HDK 45 or spindles fitted with the Adjusting Nut TR 110.

The permissible tightening torque must not be exceeded when using additional lever extensions.

The Wing Nut Spanner HD may be used up to a permissible prop load of 90 kN.

Technical data
Perm. F = 0.95 kN (corresponds to approx. 95 kg).
Perm. M = 68.28 kNcm.

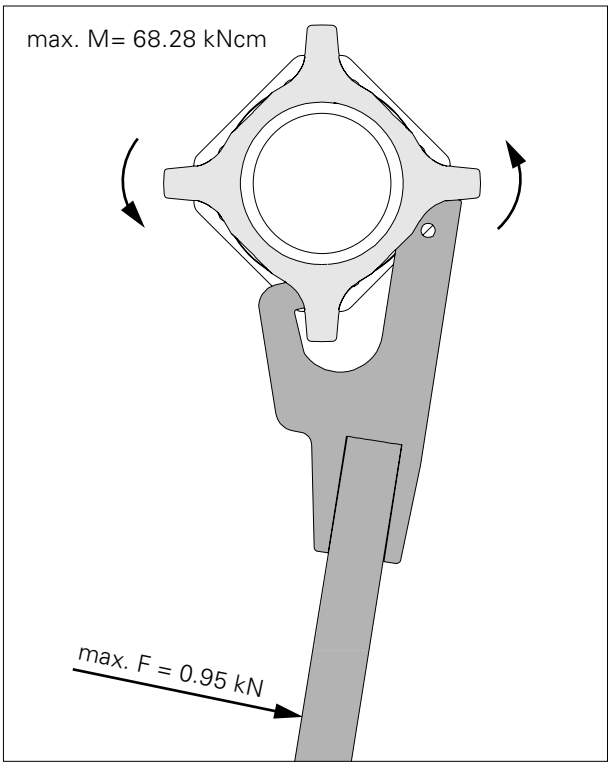

Fig. A1.09b

Main Beam HDT

Install a sufficiently large, load-bearing assembly level with timbers.

The assembly must be secured against tipping, sliding, and slipping out of position!

- Timbers should not obstruct subsequent installation of diagonal bracing and scaffold tubes. (Fig. A2.03)
- Secure lifting gear, e.g. chains or textile slings, against slipping.

Required components

4a Main Beam HDT (bottom)
4b Main Beam HDT (top)
6 Diagonal bracing consisting of:
(6.1) Double Tie Yoke HDD
(6.2) Tie Rod DW 15
(6.3) Cam Nut

Assembly

1. Before positioning the Main Beam (4), remove beam connecting bolts (4.1). (Fig. A2.02)
2. Place Main Beams as base and top beams on timbers. Spacing: see plan. (Fig. A2.01)
3. Connect Main Beam with bolts (4.1) and secure with cotter pins. (Fig. A2.02)
4. Pre-assemble diagonal bracing on the underside with Double Tie Yoke HDD (6.1), Tie Rods (6.2) and Wing Nut Counterplates or Cam Nuts (6.3). (Fig. A2.03)

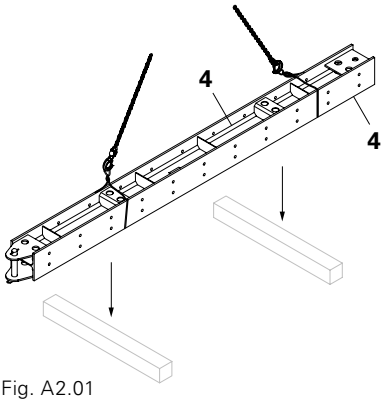

Fig. A2.01

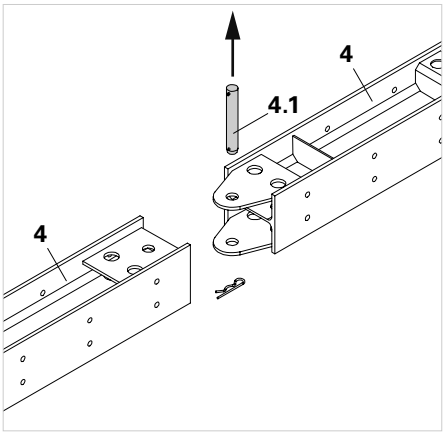

Fig. A2.02

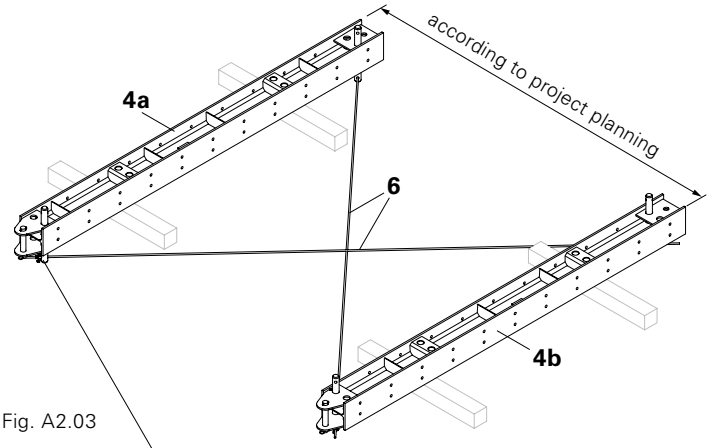

Fig. A2.03

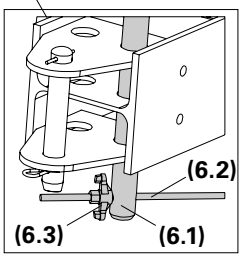

Fig. A2.03a

HD Props

Required components

4a Main Beam HDT (bottom)
4b Main Beam HDT (top)
4.2 Main Beam Clamp HD
6 Diagonal Bracing
10 HD Props consisting of:
(1) Prop Section HDS/HDSS
(2) Head Spindle HDK 45
(3) Lowering Device HDA

The assembly of Head Spindle HDK 45 (2), Prop Segment HDS/HDSS (1) and Lowering Device HDA (3) will be referred to in the further course of the Instructions for Assembly and Use for HD Props (10).

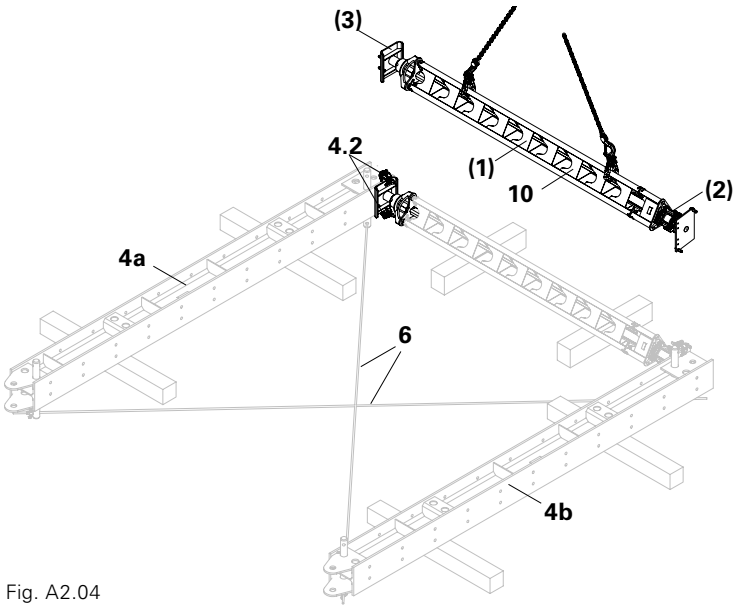

Fig. A2.04

- When installing the HD Props (10) ensure that the hexagonal driving bolt of the Lowering Device can be operated from above.
- For subsequent assembly of the scaffold tubes, always immediately install the Prop Sections HDS. (See Section Diagonal bracing)
- If other main beams are used, mount the Centering Bolts (2.2) in the outer holes of the articulated head plate (2.3) and secure them with Main Beam Clamps. (Fig. A2.07b/A2.08)

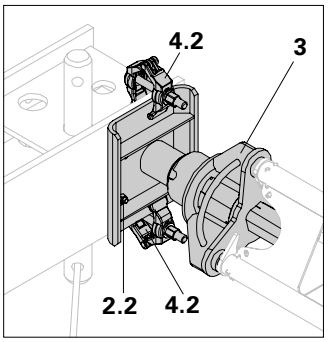

Fig. A2.05

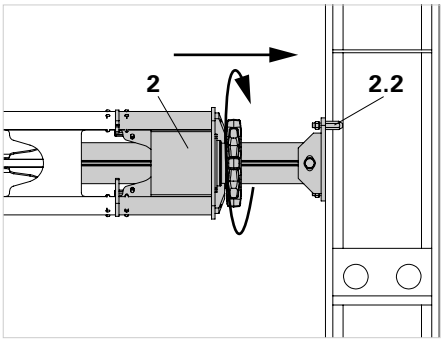

Fig. A2.06

Assembly

1. Lift HD Props (10) with retracted Head Spindles HDK 45 (2) between the Main Beams HDT. (Fig. A2.04)

Alternatively

The HD Props can be installed in single parts between the Main Beams HDT.

2. Screw out Head Spindles (2) until Head Spindles HDK 45 and the Lowering Device (3) lie against the Main Beams HDT. (Fig. A2.05/A2.06)
   → Centering Bolts (2.2) are positioned in the drilled holes on the girder. (Fig. A2.07a)
3. Secure Base Plates of the Lowering Device HDA (3) and articulated head plate (2.3) of the Head Spindles HDK 45 (2) with two Main Beam Clamps (4.2) respectively.Repeat this procedure for every second centre prop.

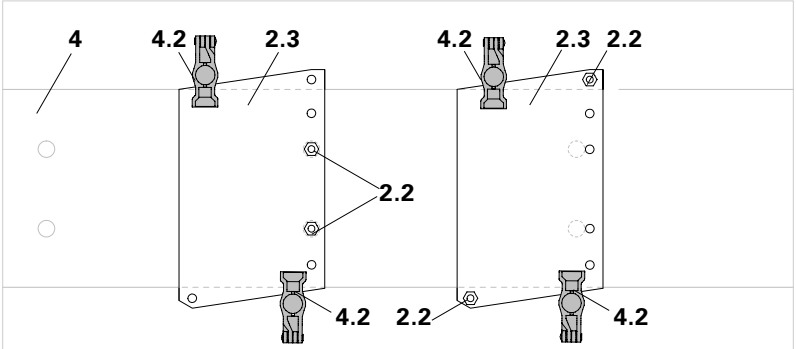

Fig. A2.07a Fig. A2.07b

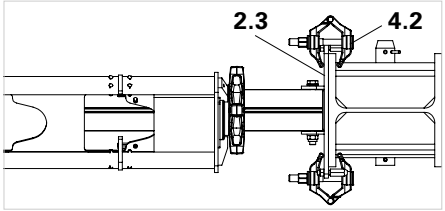

Fig. A2.08

Diagonal bracing

Required components

4a	Main Beam HDT (bottom)
4b	Main Beam HDT (top)
4.2	Main Beam Clamp HD
6	Diagonal bracing consisting of:
(6.1)	Double Tie Yoke HDD
(6.2)	Tie Rod DW 15
(6.3)	Cam Nut
10	HD Props
11	Scaffold Tubes

Assembly

1. Pre-assemble the diagonal bracing on the top side with Double Tie Yoke HDD (6.1), Tie Rods (6.2) and Wing Nut Counterplates or Cam Nuts (6.3). (Fig. A2.09a)
2. Before the diagonal bracing is finally tightened, check the right angle between the top and bottom Main Beams HDT (4a/4b) and HD Props (10).
3. If the top and bottom main beams are planned to be non-parallel, vertical assembly is then recommended.

In each case, the change in length of the Tie Rod DW 15 is to be checked. If necessary, use Tie Rod DW 20

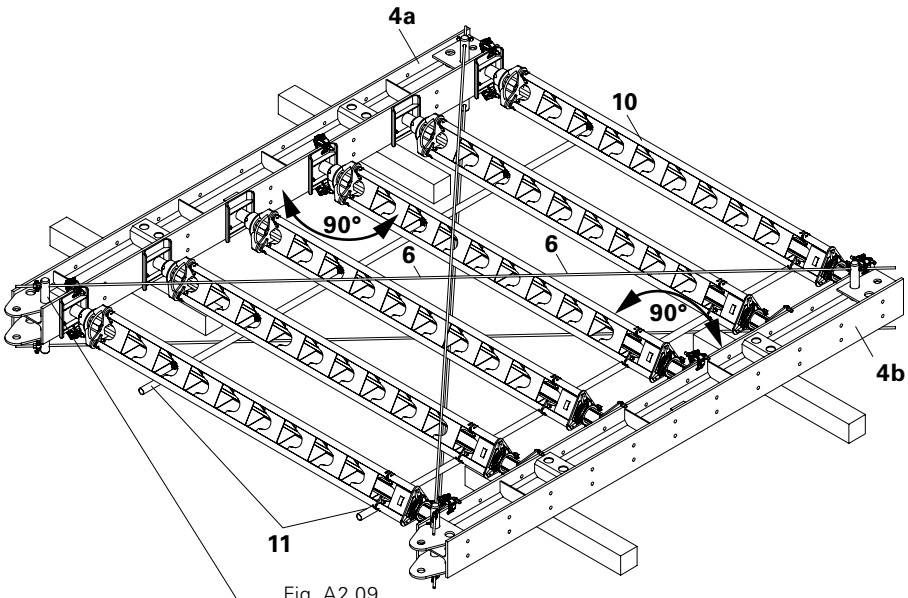

Fig. A2.09

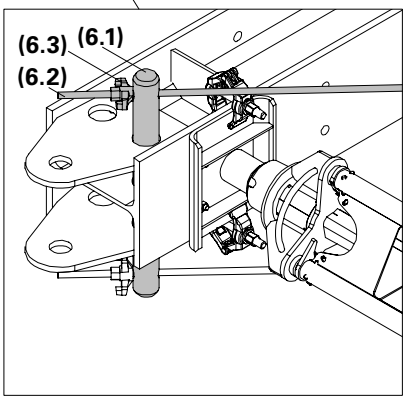

Fig. A2.09a

Scaffold tubes as a dismantling aid

For the subsequent dismantling of the Main Beam Frame.

Assembly

Mount horizontal scaffold tubes (11) with two standard couplers each per HD prop.
After the subsequent dismantling of the Main Beam HDT, these hold the HD Props in position. (Fig. A2.09)

Working platform

Required components

7.1	Scaffold Bracket HD 75
7.1a	Coupling
7.2	Guardrail Post HSGP-2
7.3	End Guardrail Frame 55
10	HD Props

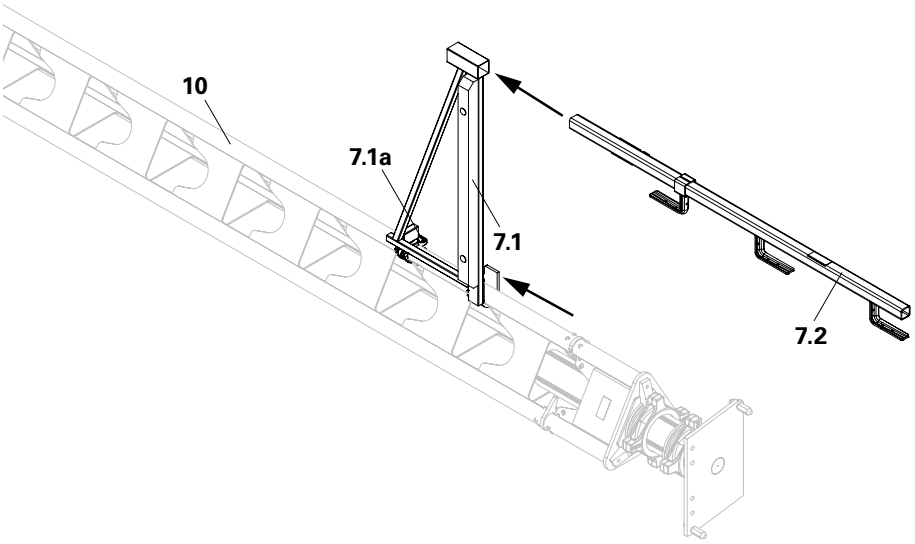

Fig. A2.10

Permissible load of 150 kg/m².
Maximum bracket spacing 1.25 m.

Assembly

1. Attach Scaffold Bracket HD 75 (7.1) to HD Prop Chords. The teeth engage in the connecting plates of the HD Props (10).
2. Fix Coupling (7.1a) on the HD Prop Chords.
3. Insert Handrail Post (7.2). (Fig. A2.10)
4. Position and secure planking and handrail boards. (Fig. A2.11)
5. Mount end handrails, e.g. End Handrail Frame 55 (7.3).

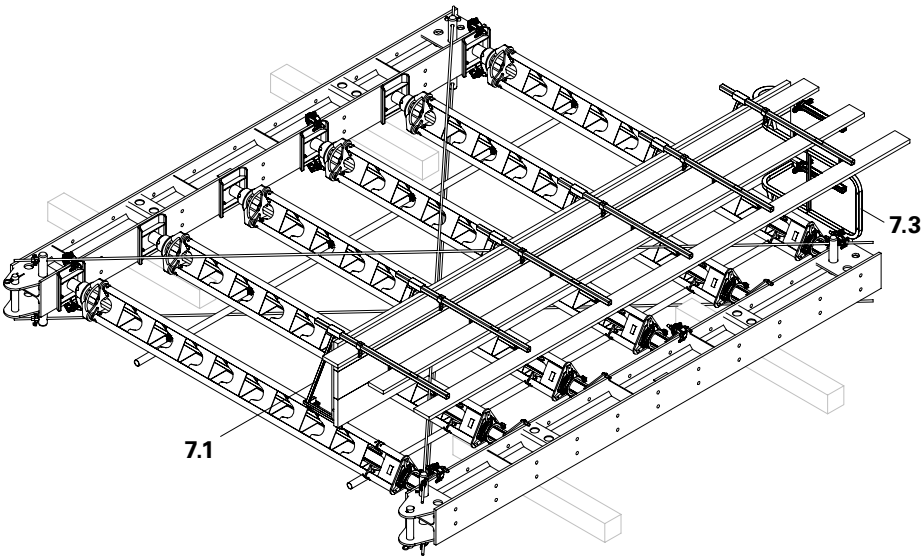

Fig. A2.11

Ladder access

Required components

4a	Main Beam HDT (bottom)
4b	Main Beam HDT (top)
8	Ladder access consisting of:
(8.1)	Ladder Base
(8.2)	Ladder 180/6
(8.3)	End Ladder 180/2
(8.4)	Ladder Hook
(8.5)	Clamping Plates
(8.6)	Ladder Safety Cage 150
9	Ladder Connector HD 200
9.1	Coupling
10	HD Props

Assembly

1. Fix Ladder Connectors HD 200 (9) with couplings (9.1) to the prop chords of the HD Prop (10). (Fig. A2.12a)
2. Pre-assemble ladder access (8) to required length.
3. Fix Ladder Base (8.1) and Ladder Hook (8.4). (Fig. A2.13)
4. Fix ladder with clamping plates (8.5) to the Ladder Connectors. (Fig. A2.14a)
5. Fix Ladder Safety Cage to ladder with the clamping plates. (Fig. A2.14 + A2.14a)

Do not mount Ladder Safety Cage in the area of the ladder joint.

Visual check of the clamping plates. The contact surface of the clamping plates must rest against the ladder profile!

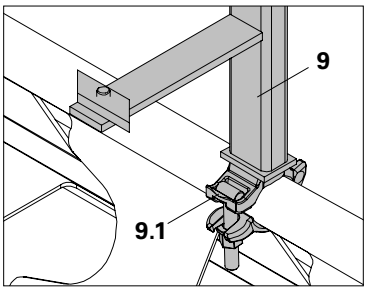

Fig. A2.12a

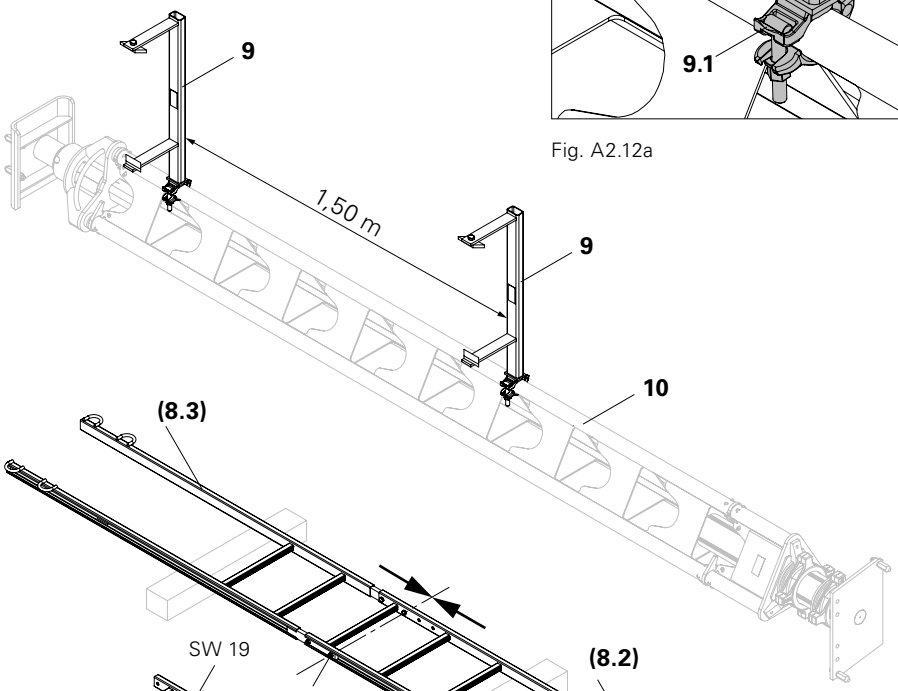

Fig. A2.12

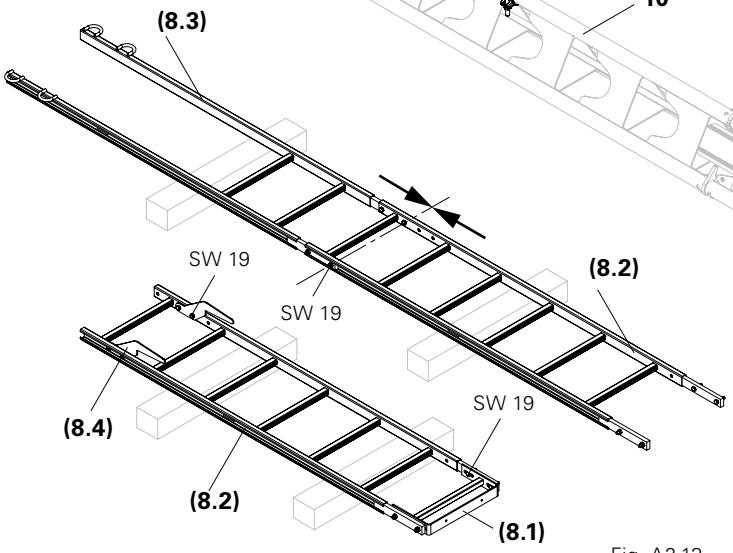

Fig. A2.13

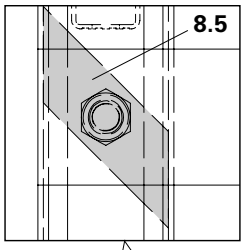

Fig. A2.14a

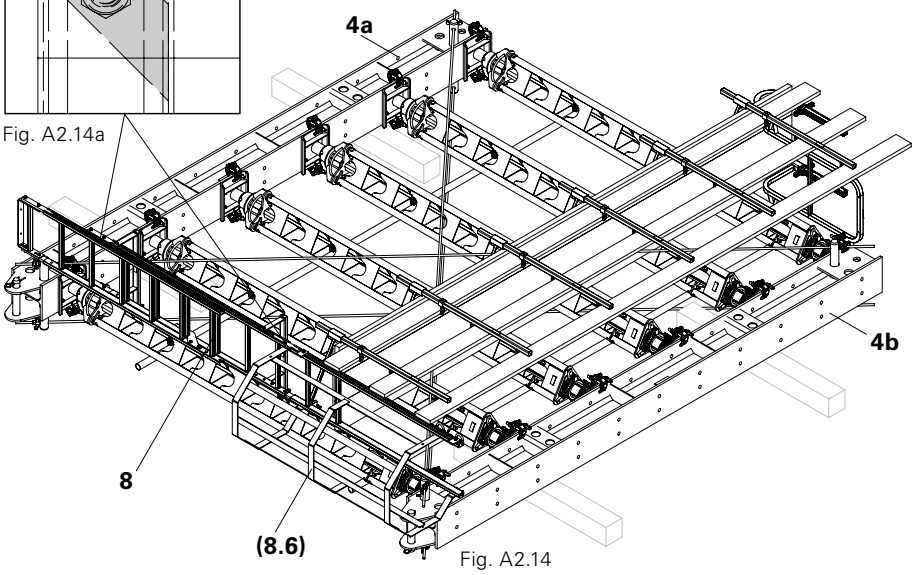

Fig. A2.14

Push-Pull Props

Risk of tipping! The Push-Pull Props do not carry any horizontal loads! They are only assembly aids!

Required components

2	Head Spindle HDK 45
4a	Main Beam HDT (bottom)
4b	Main Beam HDT (top)
5	Push-Pull Prop consisting of:
(5.1)	Brace Connector HDR
(5.2)	Base Plate-2 RS 210 - 1400
(5.3)	PERI Anchor Bolt 14/20x130
8	Ladder access
10	HD Props

Assembly

1. Fix Brace Connector HDR (5.1) to prop chord of the HD Prop (10) using a coupling. (Fig. A2.15/A2.15a)
2. Fix Push-Pull Props (5) with bolts and cotter pins. (Fig. A2.15/A2.15a)

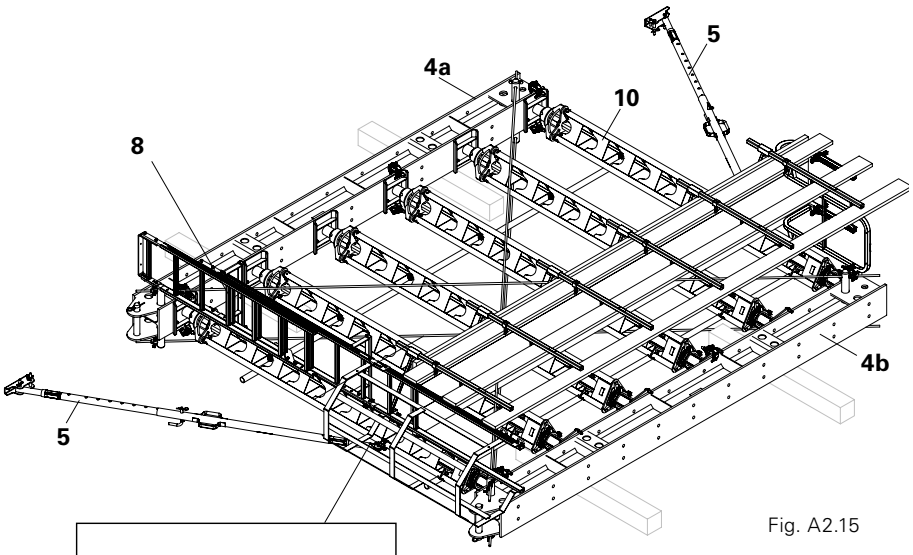

Fig. A2.15

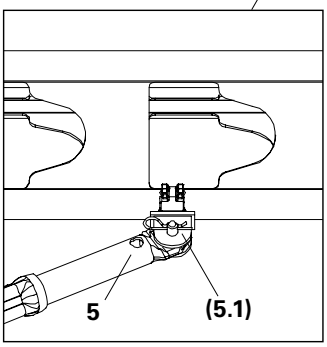

Fig. A2.15a

Main Beam Frame

If it is planned to mount longitudinal girders or precast girders on the Main Beam Frame, the horizontal support must be installed in the transverse direction of the Main Beam Frame. This must be verified by means of a static calculation.

Erection

1. Attach Main Beam Frame to the top Main Beam HDT (4b) by means of slip-proof textile strapping.
2. Place onto flat and correctly-sized foundation.
3. Anchor in beam transverse direction with a tension and compression-resistant connection, e.g. with Base Plate-2 RS 210 - 1400 (5.2) and PERI Anchor Bolt 14/20 x 130 (5.3). (Fig. A2.16a)
4. Remove textile strapping.
5. Adjust top Main Beam HDT (4b) using the Head Spindles.
   → The Main Beam Frame is now assembled. (Fig. A2.16)

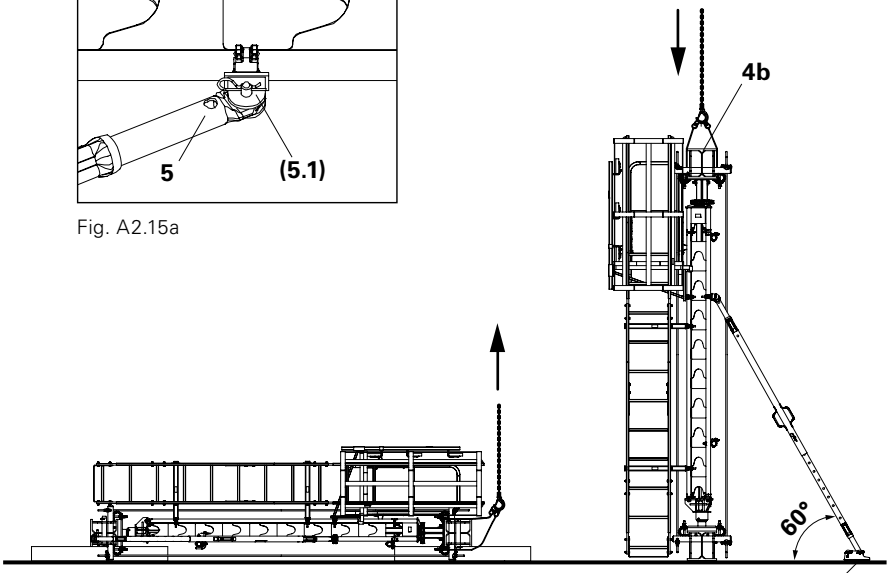

Fig. A2.16

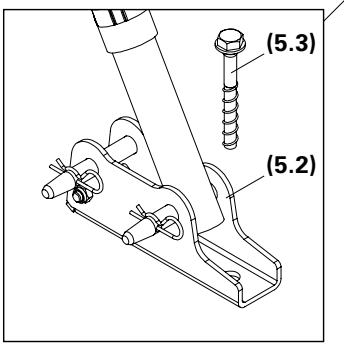

Fig. A2.16a

Main Beam HDT must have full contact to the foundation.

Main Beam HDT as Base Beam

Secure lifting gear, e.g. chains or textile strapping, against slipping.

Assembly

1. Remove bolts before setting down Base Beam (observe spacing to existing components).
2. Position Base Beam (4) on place of use (foundations). Beam must rest on the entire surface.
3. Depending on the length, connect Base Beam with bolts and cotter pins (4.1). (Fig. A3.01)

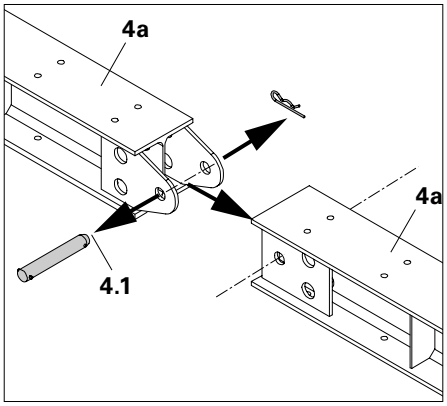

Fig. A3.01

Primary props

- Position primary props with ≤ 3.0 m spacing.
- Place HD Props on the Beam so that the hexagonal driving bolt of the Lowering Device can be operated.

Mount centering bolts in the inner position. (Fig. A3.02a)

Assembly

4. Completely extend Lowering Device (limit stop).
5. Spindle out Head Spindles (2) approx. 50 mm above nominal dimension. Consider the position of the centering bolts (2.2). (Fig. A3.02a)
6. Place pre-assembled HD Props on the Base Beam. Centre using centering bolts (2.2) or by aligning manually. (Fig. A3.02)
7. Align the HD Props. (Fig. A3.02c)
8. Secure with two Main Beam Clamps (4.2) each. (Fig. A3.02a/A3.02b)

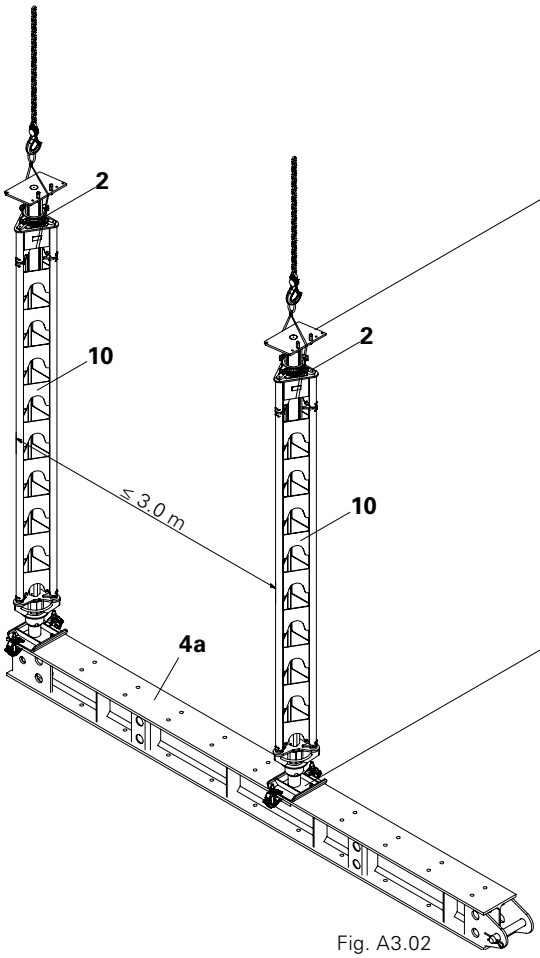

Fig. A3.02

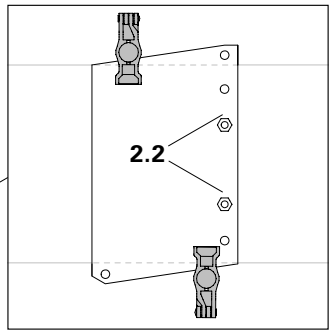

Fig. A3.02a

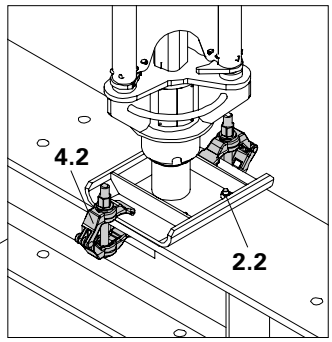

Fig. A3.02b

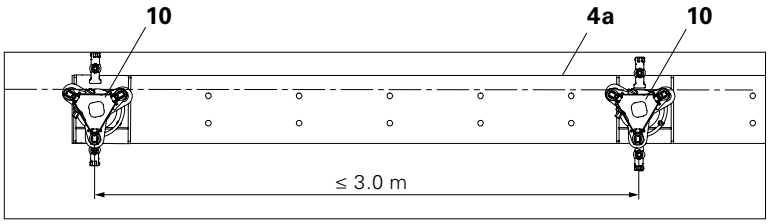

Fig. A3.02c

Primary props

Assembly

1. Secure and align the HD Props (10) with two Push-Pull Props (5) each. Arrange Push-Pull Props at right-angles to each other. (Fig. A3.03)
   – Fix to the prop chords with Brace Connectors HDR (5.1). (Fig. A3.03a)
   – Connection to the foundation and Base Beam, e.g. with Base Plate-2 RS 210 - 1400 (5.2) and PERI Anchor Bolt 14/20 x 130 (5.3). (Fig. A3.03b)
2. Mount horizontal scaffold tubes with two standard couplers (5.7) per prop. (Fig. A3.03/A3.03c)
3. The scaffold tubes serve as assembly aids for intermediate props during assembly and dismantling of the Main Beam Frame.
4. One scaffold tube is always mounted on the last prop section.

If the distance to the assembly area exceeds 2.50 m:

a) Mount an additional scaffold tube approx. 2.0 m above the assembly area.

b) Maximum scaffold tube spacing: 4.0 m. (Fig. A3.03)

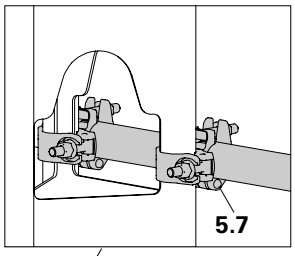

Fig. A3.03c

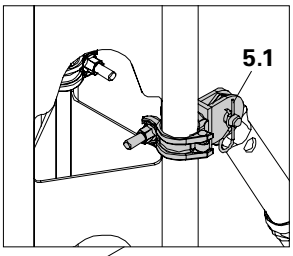

Fig. A3.03a

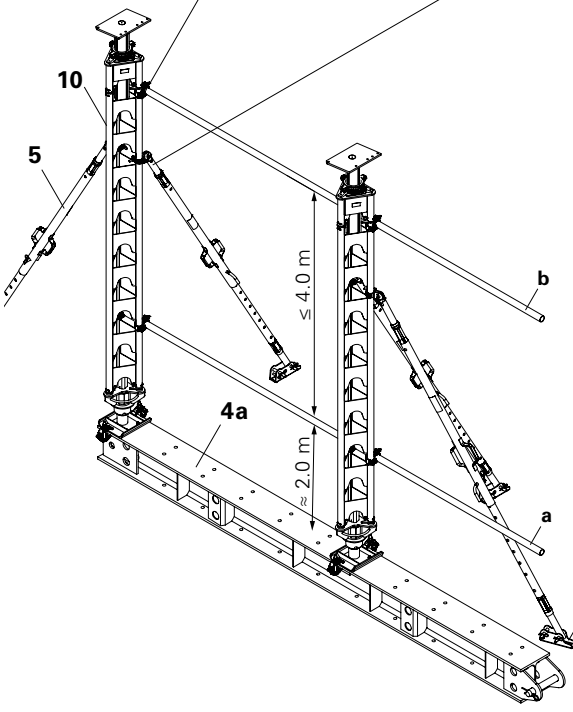

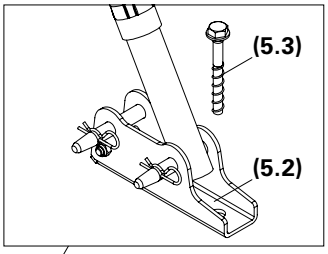

Fig. A3.03b

Fig. A3.03

Intermediate props

Assembly

1. Spindle out Head Spindle (2) of the intermediate props approx. 50 mm under the nominal dimension.
2. Place HD Props on the Base Beam (4). Centre with centering bolts or by aligning manually.
3. Connect scaffold tubes and props with two standard couplers (5.7) each. (Fig. A3.04)

→ Props are now assembled.

Alternatively

Assembly of props in individual parts:

– Lowering Device; alternative, Base Adapter HD,
– Prop Sections,
– Head Spindle,
– Push-Pull Props and Scaffold Tubes.

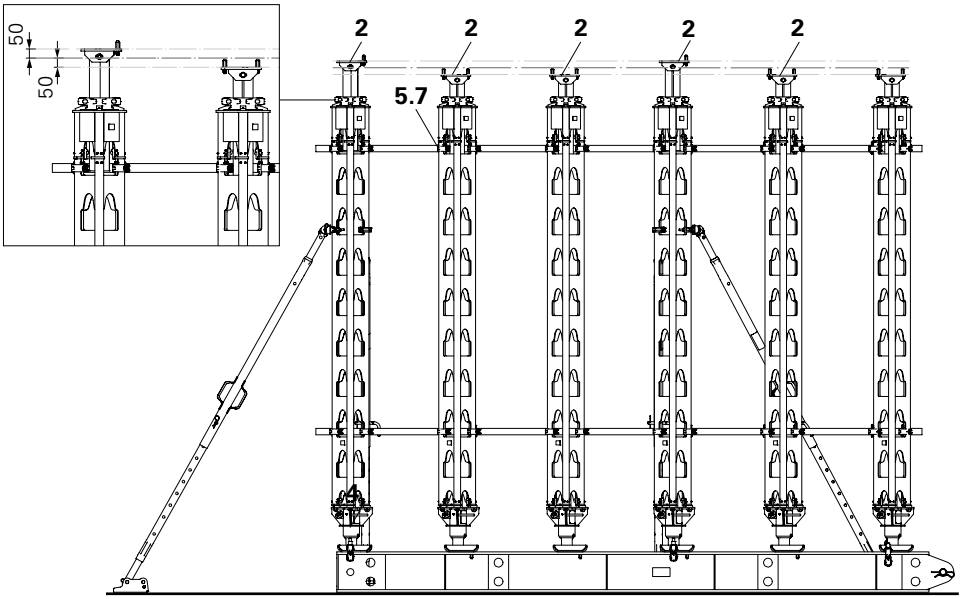

Fig. A3.04

Main Beam HDT as Top Beam

- All Lowering Devices HDA (3) must be fully extended before levelling the Main Beam! (Fig. A3.05)
- Safe assembly of the top beam by attaching a working scaffold with access. (See Section A2/Working Platform)

Alternatively

- Assembly of PERI UP Flex Reinforcement Scaffold

Required components

2.2 Centering Bolts
4b Main Beam HDT (top)
4.2 Main Beam Clamp HD 70
10 HD Props

Assembly

1. Attach top beam (4b) slip-free with textile strapping.
2. Position primary props (10a) and fix on the inside with centering bolts (2.2a). (Fig. A3.05 + Fig. A3.05a)
3. Secure articulated head plates (2.3) to the primary props with two Main Beam Clamps (4.2) each. (Fig. A3.05c)
4. Level main beam frame using the Head Spindles (2).
5. Spindle out the Head Spindles of the intermediate props. Fix laterally with centering bolts (2.2b). (Fig. A3.05b)
6. Secure articulated head plates to top beam with beam clamps.

→ The top beam is now mounted.

If a second main beam frame is assembled which is connected to the first, the Main Beams (4b) must be connected to each other before mounting the Main Beam Clamps in the main beam axis and connected to each other using Bolts Ø 50 x 330 (4.1) and levelled. (Fig. A3.05)

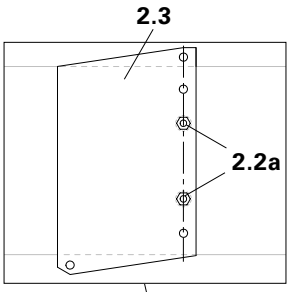

Fig. A3.05a

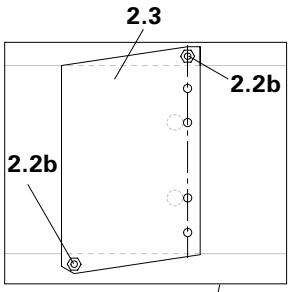

Fig. A3.05b

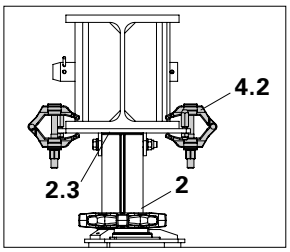

Fig. A3.05c

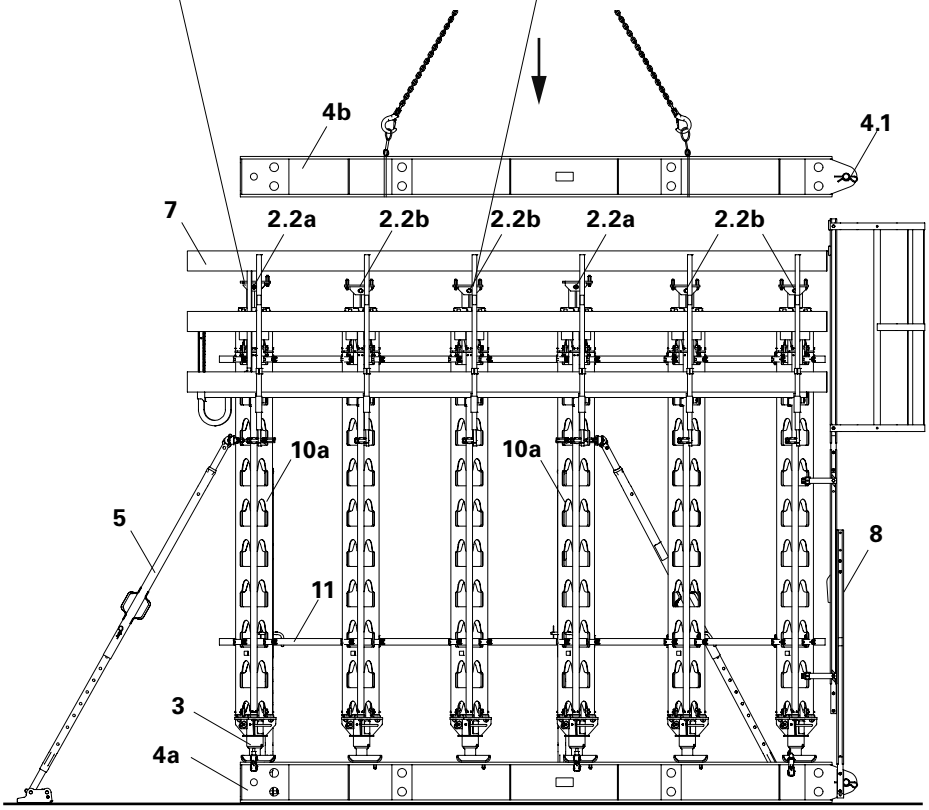

Fig. A3.05

Diagonal bracing

Before positioning longitudinal beams or pre-fabricated girders, mount horizontal brackets in transverse direction of the beam as statically required.

For stabilization and transferring of horizontal loads, mount diagonal bracing on both sides of the main beam frame. (Fig. A3.06)

Assembly

1. Insert Double Tie Yoke (6.1) into the Main Beam and ensure symmetrical overlap on both sides.

Diagonally install DW 15 Tie Rods (6.2) on both sides.

In each case, the change in length of the Tie Rod DW 15 is to be statically checked. If necessary, use Tie Rod DW 20.

2. Evenly tension using Wing Nut Counterplate or Cam Nut (6.3). (Fig. A3.06a)

Assembly of diagonal bracing is now finished.
Main Beam Frame assembly is now finished.

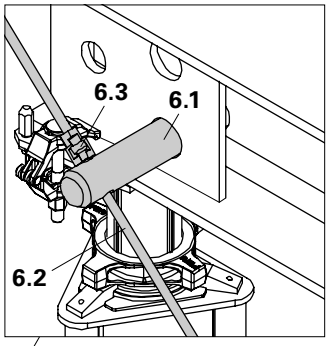

Fig. A3.06a

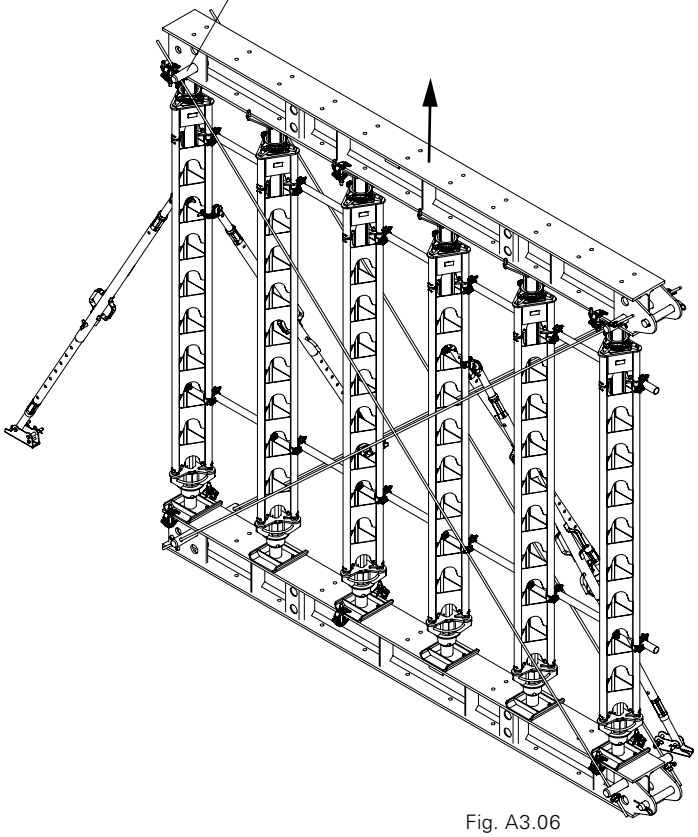
Fig. A3.06

Relieving the Main Beam Frame

Lower HD Prop Sections one after the other in order to prevent overloading the individual props. (10 turns = 2.34 mm)

A project-specific lowering plan must be created for each dismantling operation. The described procedure must be complied with.

Lowering

1. Loosen the Push-Pull Props (5), but do not remove.
2. Release the HD Props (10) one by one in accordance with the lowering plan by turning the hexagonal bolt (3a) in a counterclockwise direction. (Fig. A4.01)
3. Re-tighten the diagonal bracing (6.2) and retract the Push-Pull Props (5) at the same time. (Fig. A4.01d)
4. Repeat procedure until the Main Beam Frame has been lowered by approx. 100 mm.

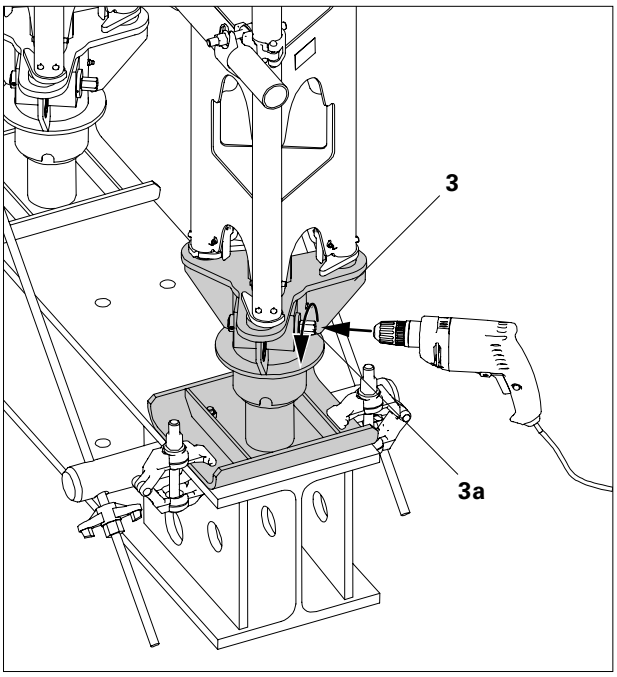

Fig. A4.01

Lowering the first prop
(Fig. A4.01a)

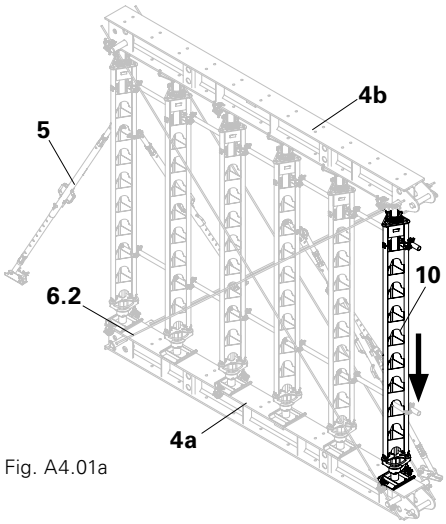

Fig. A4.01a

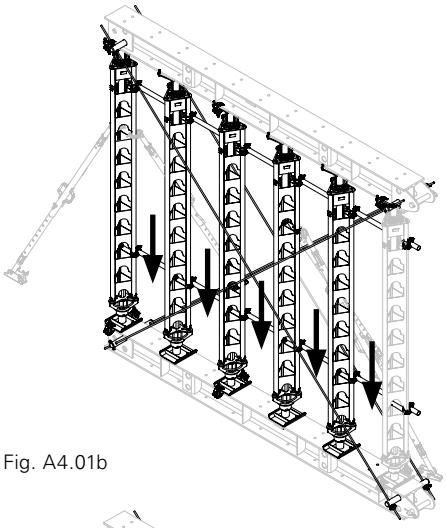

Fig. A4.01b

Step-by-step lowering of further props
(Fig. A4.01b)

Re-tighten diagonal bracing after every lowering procedure.
(Fig. A4.01c/A4.01d)

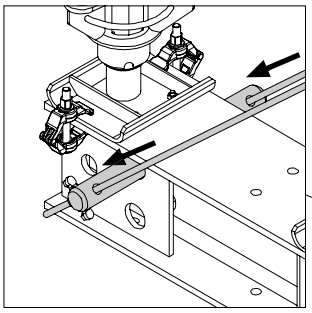

Fig. A4.01c

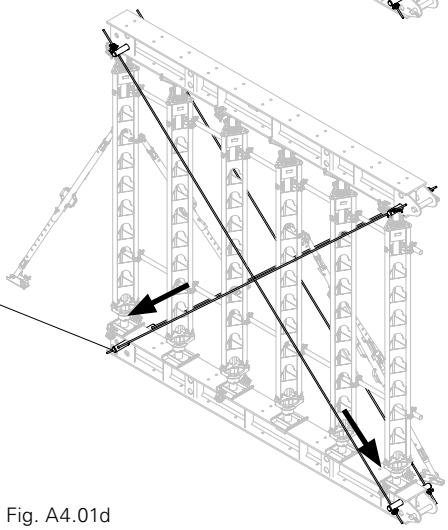

Fig. A4.01d

Dismantling of the longitudinal beam

If there is no possibility to dismantle the longitudinal beam directly under the structure, the Trolley HD (12) can be used.

Always use two trolleys at the same time!

Required components

12	Trolley consisting of:
(12.1)	Cross Tube
(12.2)	Longitudinal Profiles
(12.3)	Lever
(12.4)	Cam Nut
29	Longitudinal Beam

Assembly

1. Remove cross tube (12.1) from the Trolley (12). (Fig. 03)
2. Push Trolley (12) under the longitudinal beam (29) on the Main Beam HDT (4b) and fix cross tube (12.1).
3. Evenly tighten the cam nuts (12.4) until the longitudinal profiles (12.2) rests against the longitudinal beam.
4. Push the lever (12.3) downwards; the longitudinal beam (29) is then lifted approx. 5 mm.
5. If installed, remove centering bars (6.4). (Fig. A4.05)
6. Release all 4 cam nuts when the lever (12.3) has been pulled downwards using a ratchet spanner (SW 27) until there is a gap of approx. 3 mm between the Main Beam HDT and longitudinal beam.
7. Move out longitudinal beam onto the Main Beam HDT (4b).

Risk of crushing! Always hold the lever down when the longitudinal beam is being moved outwards. Stop procedure by lifting lever upwards.

8. Remove Trolley, and remove longitudinal beam, e.g. by crane.

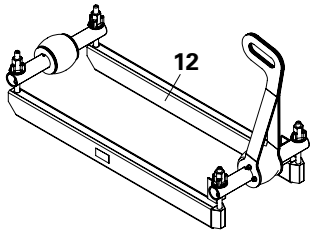

Fig. A4.02

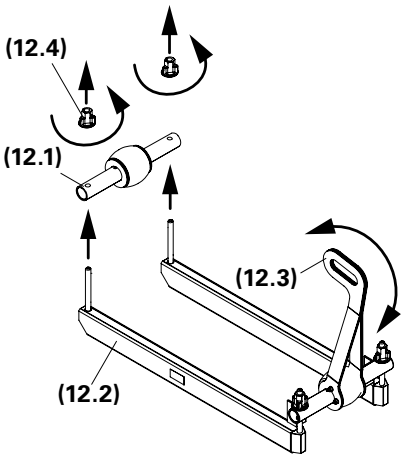

Fig. A4.03

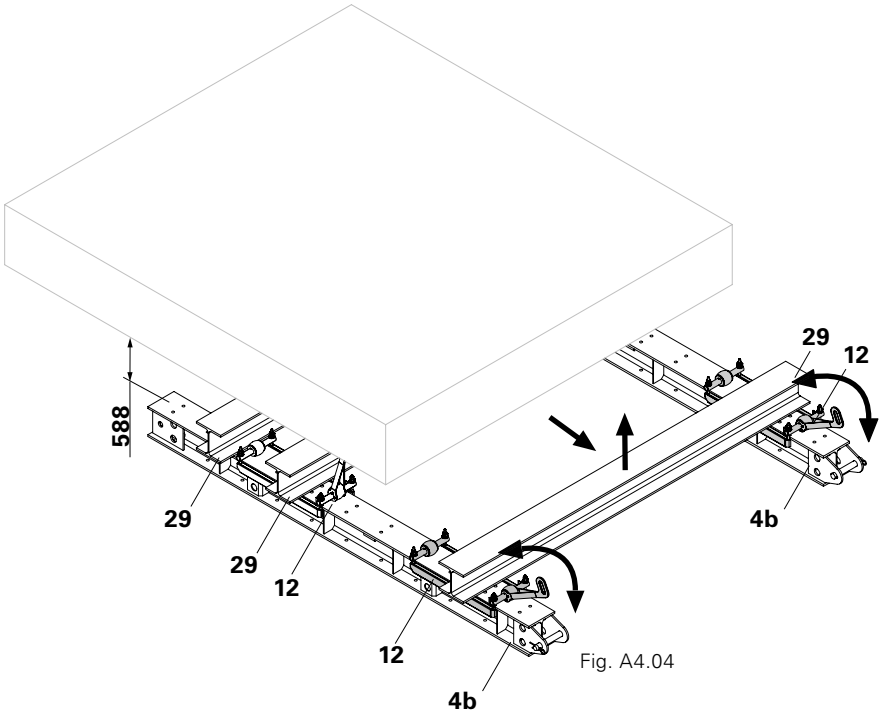

Fig. A4.04

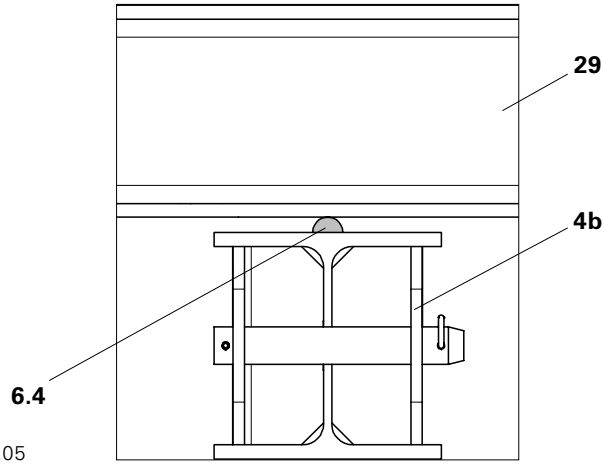

Fig. A4.05

Dismantling of non-parallel main beams

If the Main Beams HDT (4b) are not parallel, the Trolley (12) will collide with the top chord of the Main Beam HDT.
If this is the case, lower the Trolley and re-position. If necessary, repeat procedure. (Fig. A4.06)

Risk of crushing! Always hold the lever down when the longitudinal beam is being moved outwards. Stop procedure by lifting lever upwards.

Inclined main beams

- Release all 4 cam nuts (12.4) when the lever has been pulled downwards using a ratchet spanner (SW 27) until there is a gap of approx. 3 mm between the Main Beam HDT and longitudinal beam.
- Press lever downwards and move out the longitudinal beam.

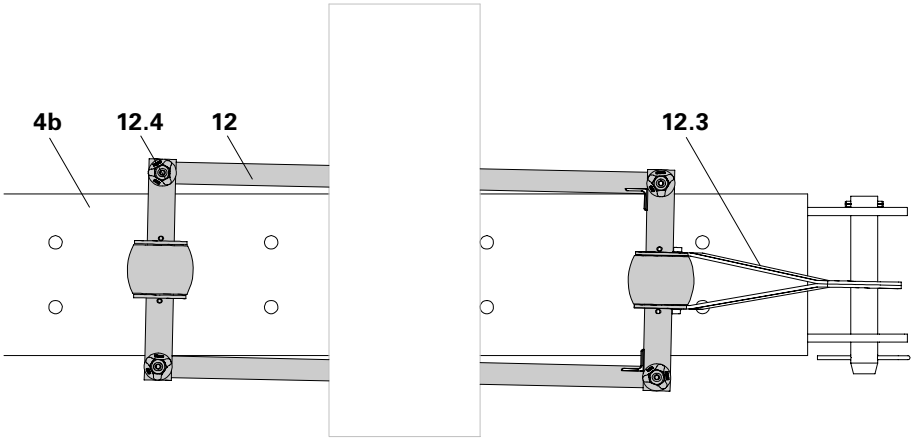

Fig. A4.06

Vertical dismantling of the Main Beam Frame without working platform

Beware of falling components!
- **Dismantling is carried out from a safe working position, e.g. using a reinforcement scaffold.**
- **Remove any loose components or secure them against falling.**

Dismantling the Main Beam HDT

1. Fix Push-Pull Props (5) as dismantling aids. (Fig. A4.07)
2. Attach slip-proof textile strapping to the Main Beam HDT (4b) and relieve the Main Beam Frame by means of crane lifting gear.
3. Loosen cam nuts and remove.
4. Remove diagonal bracing (6.2).
5. Remove Double Tie Yoke (6.1).
6. Remove the Main Beam Clamps (4.2) from the Main Beam HDT (4b).
7. Lift and set down the Main Beam HDT (4b).

If dismantling with the crane is not possible, lift the Main Beam HDT (4b) using a lift truck or telescopic stacker.

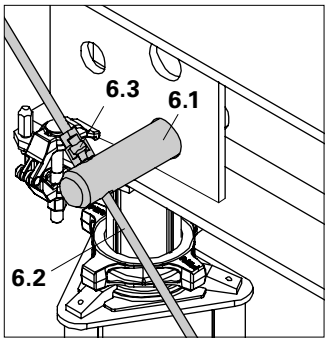

Fig. A3.07a

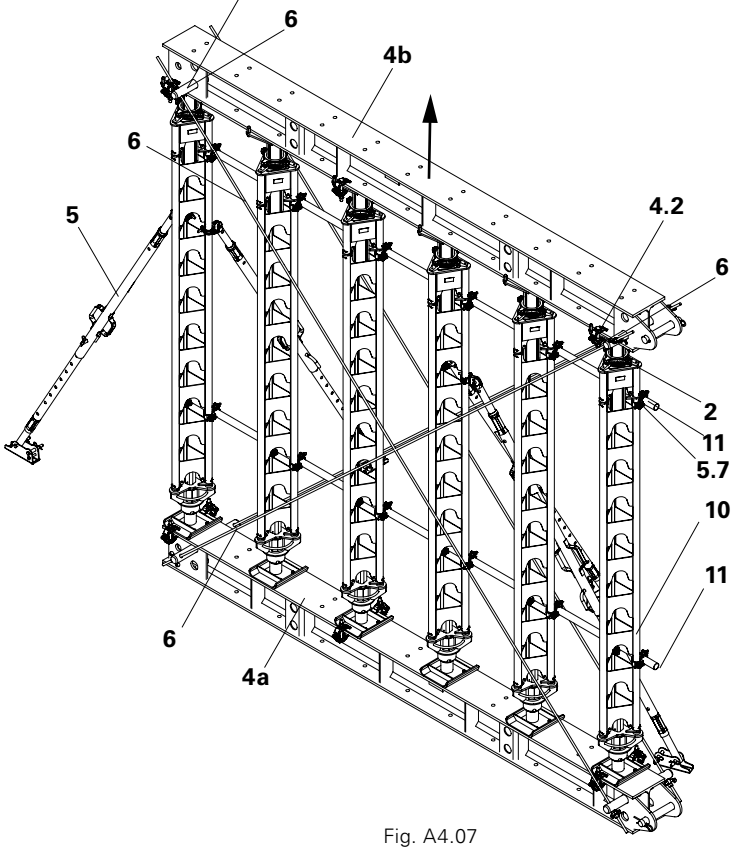

Fig. A4.07

Risk of tipping! The primary props (10a) are only dismantled when all other HD Props have been removed!

Dismantling the HD Props

1. Wrap textile straps around Head Spindle HDK (2) of the HD Props (10) thus ensuring it does not slip, and lift slightly with crane lifting gear.
2. Remove the standard couplings (5.7) from the HD Props to be lifted.
3. Remove both Main Beam Clamps (4.2) on the Main Beam HDT (4a) of the HD Prop (10).
4. Lift the HD Prop and set down.

If dismantling with the crane is not possible, lift the Main Beam HDT (4b) using a lift truck or telescopic stacker.

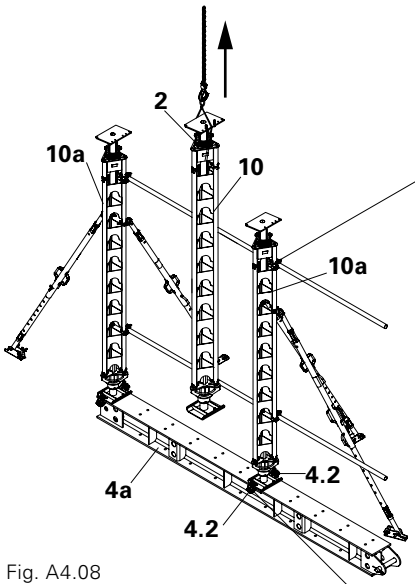

Fig. A4.08

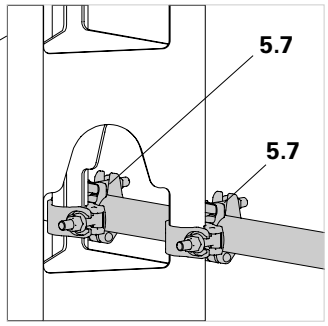

Fig. A4.08a

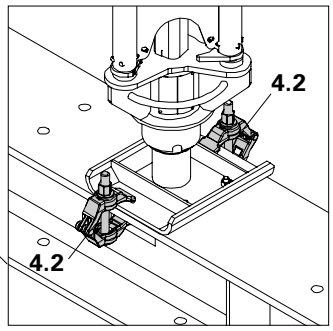

Fig. A4.08b

Dismantling the primary props

1. Wrap textile straps around Head Spindle HDK (2) of the HD Prop (10a) thus ensuring it does not slip, and lift slightly with crane lifting gear.
2. Remove the standard couplings (5.7) from the primary props to be lifted.
3. Remove both Main Beam Clamps (4.2).
4. Remove Push-Pull Props (5).
5. Lift and set down the primary prop (10a).
6. Release Head Spindle HDK (2) and Lowering Device HDA (3) from the Prop Section HDS/HDSS (1). (Fig. A4.11)

For the safe and correct storage of components such as the Head Spindle HDK (2) or Lowering Device HDA (3), it is recommended to use PERI wire crates.

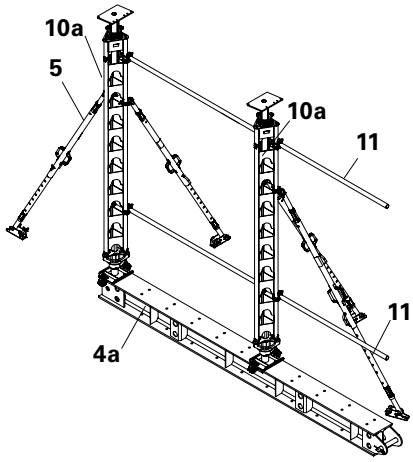

Fig. A4.09

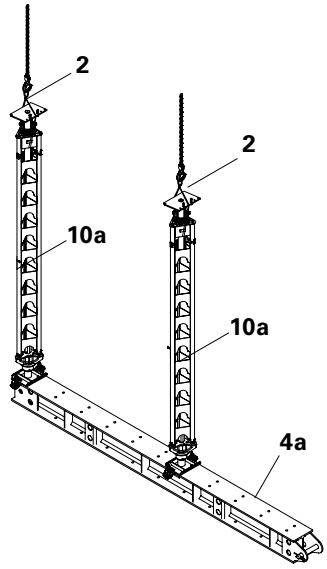

Fig. A4.10

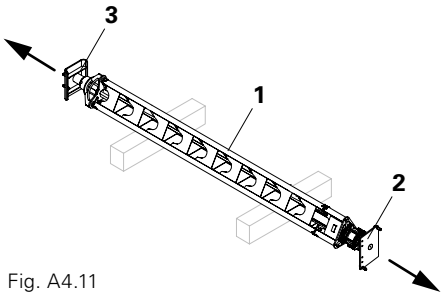

Fig. A4.11

Load transfer

Always apply loads centrically to the main beam!

Install centering bar (6.4) between the Main Beams HDT (4b) and longitudinal beams (29). (Fig. B1.01)
Check right-angle between the centering bar (6.4) and longitudinal beam (29).

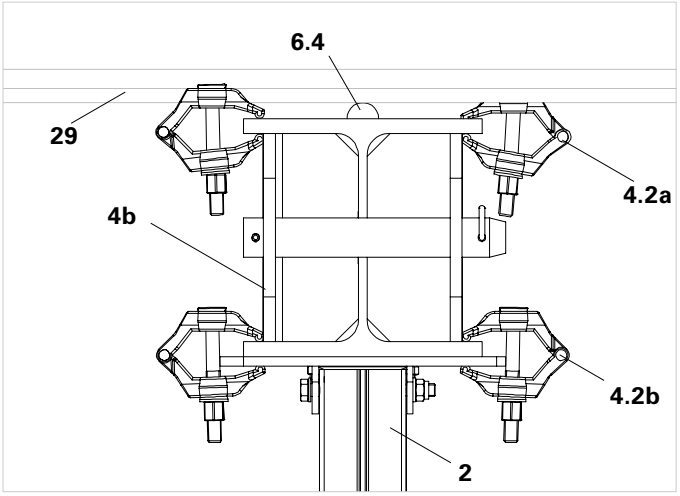

Fig. B1.01

Horizontal loads

Do not transfer horizontal loads into HD Props (10)! Transfer the loads from top girder level directly to suitable structural components!
Main Beam Clamps fix the position of the longitudinal beam (29).
Do not clamp the top main beam flanges and bottom longitudinal beam flanges together with Main Beam Clamps!

General
For transferring horizontal loads in Main Beam Frames and stabilizing HD Props, bracing consisting of Tie Rods DW 15 may be used.
Scaffold tube couplers can be attached to the HD Props (10).

Horizontal loads from longitudinal girders
Transfer horizontal loads by means of friction and Main Beam Clamps (4.2a/b) into the top beam.

Horizontal loads at the level of the Main Beam Frame
Transfer horizontal loads from the Main Beam to the bottom beam via diagonal bracing (6) consisting of DW 15 Tie Rods (if necessary DW 20). From here, transfer the load into the ground via friction or embedded components and foundations.
(Fig. B1.01a)

Installation of Main Beam Clamps
For transferring horizontal loads:
– crosswise to the Main Beam HDT (4b)
  → Main Beam Clamp (4.2b)
– longitudinally to the Main Beam HDT
  → Main Beam Clamp (4.2a)

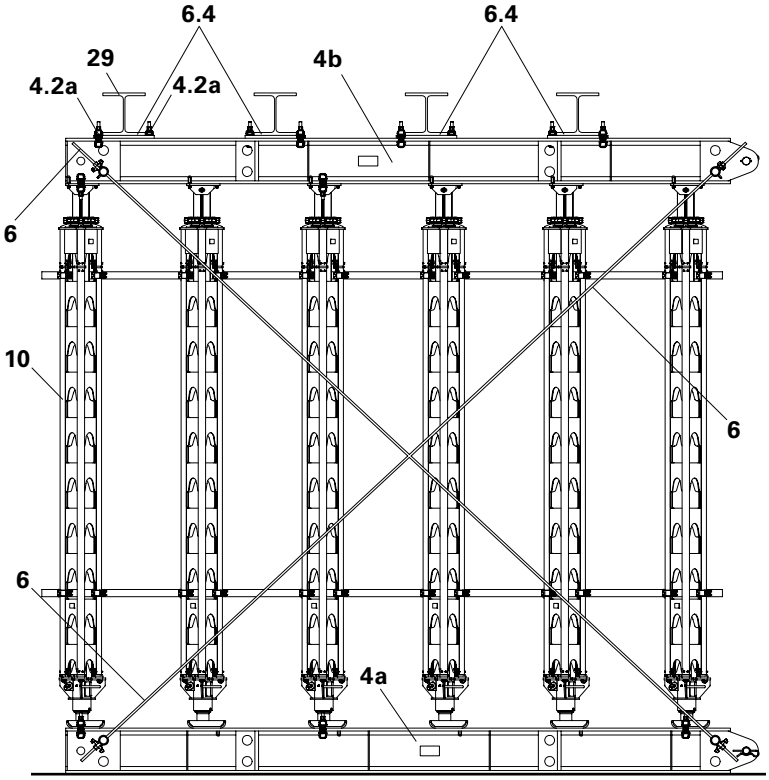

Fig. B1.01a

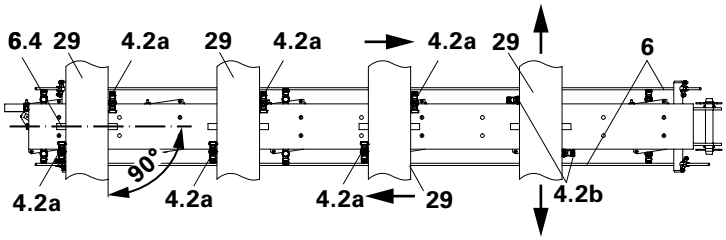

Fig. B1.01b

Horizontal loads

at right-angles to the level of the Main Beam Frame
are transferred directly from the Main Beam HDT (4) into existing structures e.g. abutment.

Risk of tipping!
The Push-Pull Props (5) do not carry any horizontal loads!
They are only assembly aids!
(Fig. B1.03)

Provide embedded components during the construction of an abutment.

Examples
Tensile and compression-proof connection
according to structural analysis with DW 15 Tie Rods and e.g. Anchor Sleeve M 24, or existing tie hole.

Section A-A

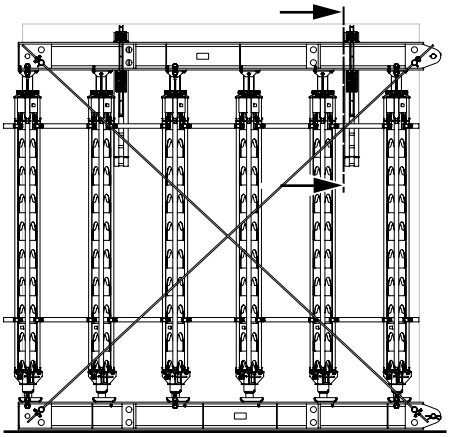

Fig. B1.02

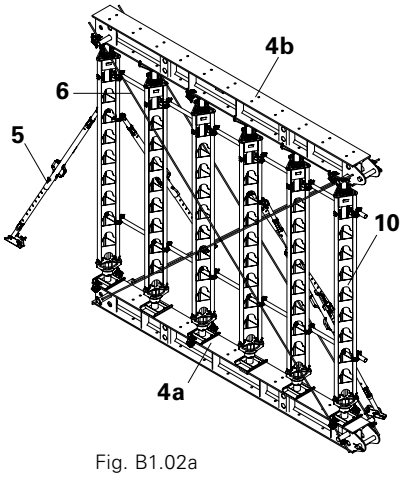

Fig. B1.02a

Required components

23	010030	Steel Waler SRZ U100, L = 1.20 m	1x
24	037150	Tie Yoke DW 15	2x
25	030090	Hex. Nut DW 15 SW 30/108	2x
26		Tie Rod DW 15, galv.	2x
27	013010	Coupling VKZ 99	1x
28	030370	Wingnut Pivot Plate DW 15	2x
30		Timbers (provided by contractor)	2x
31	710334	Nut M20-8, galv.	2x
32	024910	Bolt M20 x 100-8.8, galv.	2x

Fixing to an existing structure

Variant A (Fig. B1.02a)

22	026230	Anchor Sleeve DW 15	1x
26		Tie Rod DW 15, galv. (length varies)	2x
28	030370	Wingnut Pivot Plate DW 15	2x

Variant B (Fig. B1.02a)

26		Tie Rod DW 15, galv. (length varies)	1x
28	030370	Wingnut Pivot Plate DW 15	2x

Section A-A

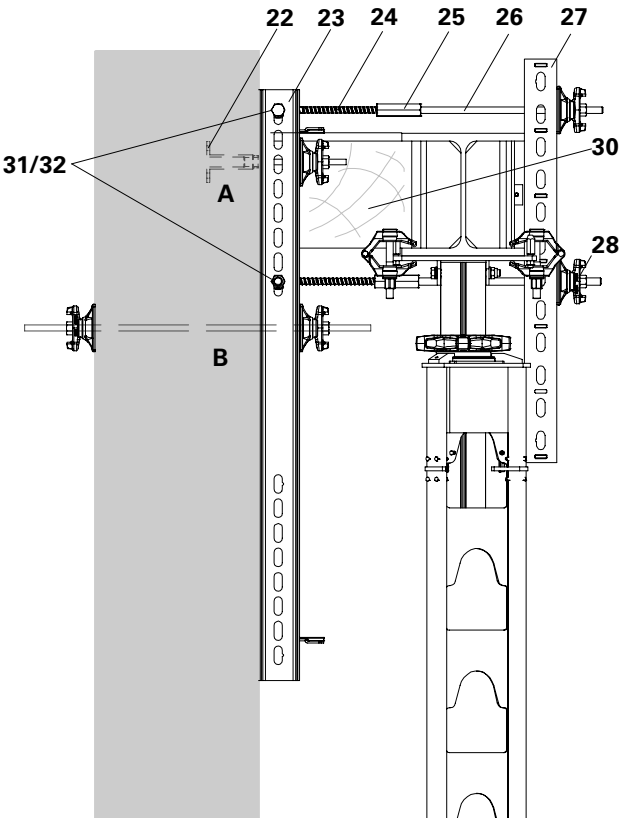

Fig. B1.03

Free-standing Main Beam Frames

1. Assemble free-standing Main Beam Frames, as described in Chapters A1 – A3.
2. Horizontal forces at the level of the Main Beam Frame are transferred via diagonal bracing (6). (See Chapter A2/A3)
3. Horizontal forces lateral to the Main Beam Frame are transferred via Push-Pull Props (5) which are fixed to auxiliary foundations by means of a Connecting Plate AV (5.4) on the Main Beam HDT (4b) and Base Plate-2 RS 210-1400 (5.2). (Fig. B2.01a/B2.01b)
4. Permissible horizontal loads: see tables below.
5. Install Push-Pull Prop at an angle of $\beta = 30°$.
6. Secure Connecting Plate AV against slipping.
7. Mount Connecting Plate AV on the bottom chord of the Main Beam HDT (4b) by means of Bolt and Nut M24 (5.5).
8. Fix an additional Main Beam Clamp (4.2) to the right and left of the Connecting Plate AV (5.4). (Fig. B2.01b)
   → Arrangement and installation of the Main Beam Clamp according to the approval.

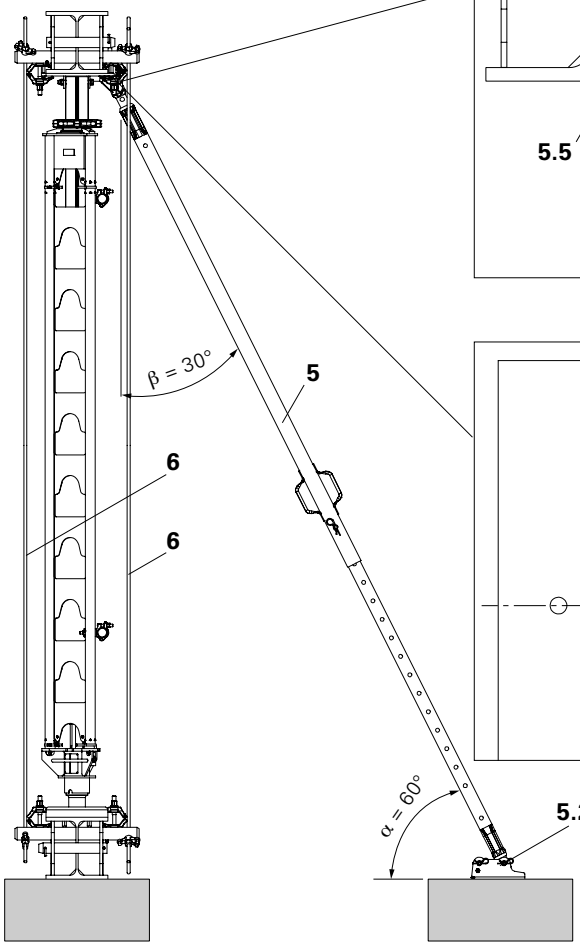

Fig. B2.01

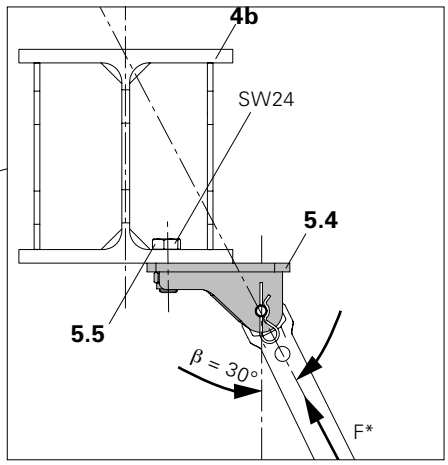

Fig. B2.01a

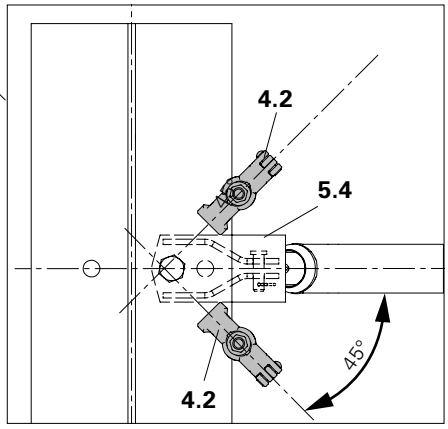

Fig. B2.01b

The permissible load of the respective Push-Pull Prop must be considered separately.

Permissible force to be carried by the Connecting Plate AV for β = 30°

Perm. compressive force		Perm. tensile force	
F* [kN]	perm. horizontal component [kN]	F* [kN]	perm. horizontal component [kN]
70.8	35.4	24.7	12.4

The total amount of the horizontal components of all push-pull prop forces per main beam frame must be less than 3% of the total amount of all permissible prop loads of the main beam frame.

Permissible force to be carried by the Base Plate-2 RS 210-1400 for α = 60° (Fig. B2.01c)

Perm. compressive force		Perm. tensile force	
F* [kN]	respective dowel force [kN]	F* [kN]	respective dowel force [kN]
25.1	12.5	16.9	23.7

*F = Push-Pull Prop load

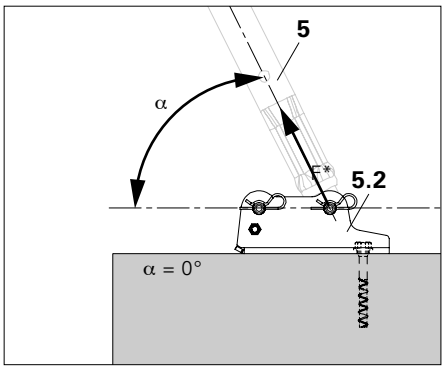

Fig. B2.01c

Individual props

- **Appropriately secure HD Props (10) at top and bottom against lateral movement.**
- **Secure free-standing individual props against tipping over, e.g. with Push-Pull Props (5) and scaffold tube bracing (11).**

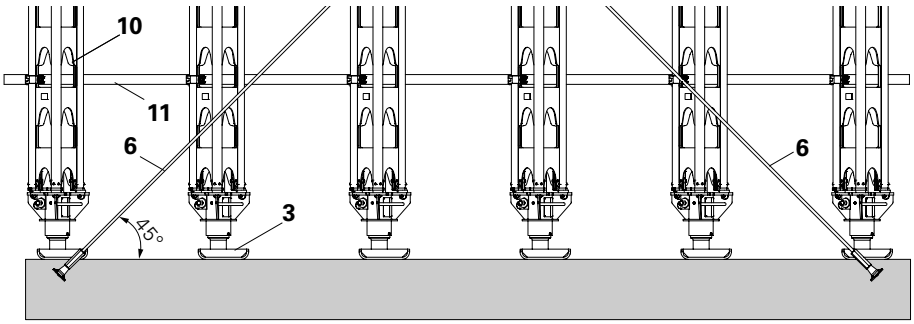

Fig. B2.02

Main Beam Frames without bottom Main Beam HDT (4a)

- Forces from the diagonal bracing (6) must be transferred directly into the foundations e.g. via the anchoring system of the PERI Brace Frame.
- The base plates of the Lowering Device HDA (3) must lie full-faced on the foundations. (Fig. B2.02)

Main Beam Frames of two or more Individual Main Beam Frames

Project-related planning and calculations are to be implemented here. Loads are to be evenly spread on the single main beam areas. (Fig. B2.03)

- Every system is to be considered as a component system.
- For multi-level main beam frame units, each beam position is to be horizontally fixed.
- For this, project-specific execution details and separate static proof are required.
- Horizontal loads at right-angles to the level of the Main Beam Frame are transferred directly from the Main Beam HDT (4a/b/c) into existing structures e.g. abutment. (See Section B1)

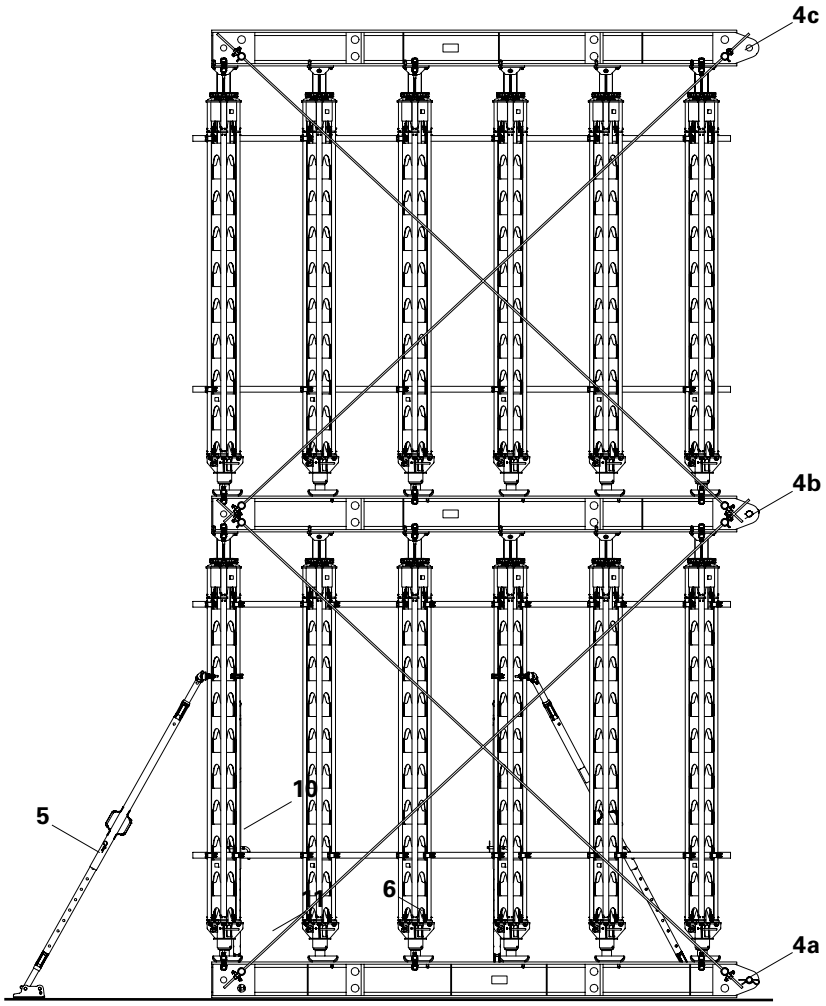

Fig. B2.03

Individual props from Prop Sections HD 200 up to L_{max} = 6.0 m

Additional support
L_{max} = 6.0 m: no support.

Required components:

1	Prop Sections HDS/HDSS
15.1	Compression Head HD
15.2	Compression Brace Spindle HD
15.3	Base Plate HD

Example
(Fig. B3.01)

Loads
Max. permissible load independent of the inclination:
- Also valid for horizontal use, for wind dynamic pressure $q_{(z)}$ = 0.5 kN/m²,
- steel sections F_{max} = 153 kN,
- aluminium sections F_{max} = 135 kN.

- The Base Plate HD must be verified separately.
- The bolt position depends on the inclination. (See Section B3)

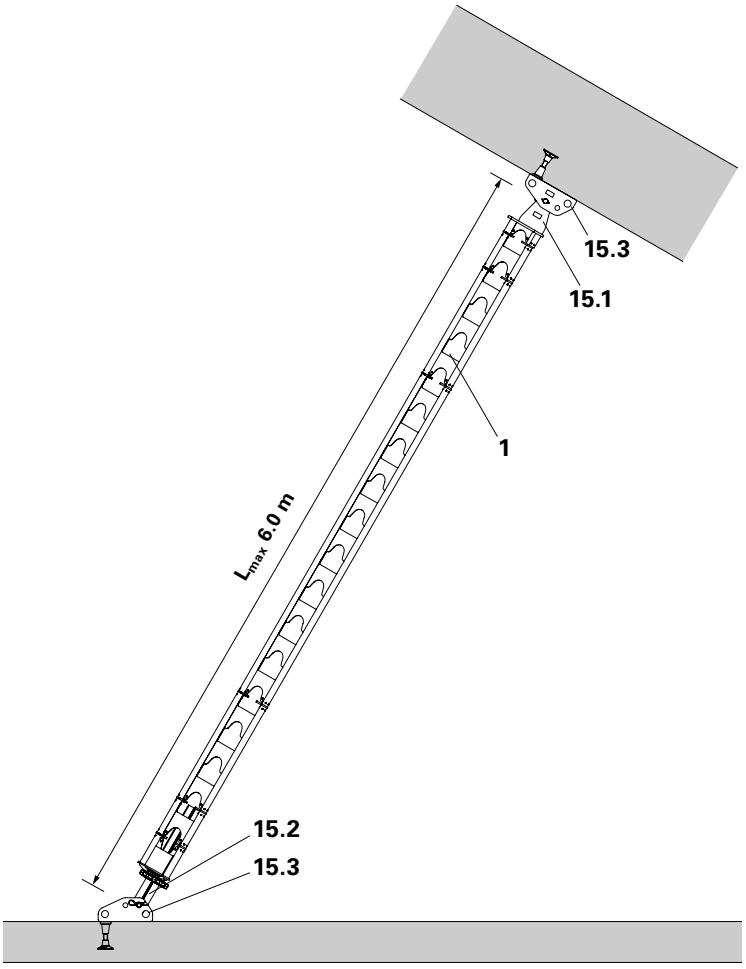

Fig. B3.01

Individual props from Prop Sections HD 200 L = 6.0 m up to L_{max} = 12.0 m

Additional support
L_{max} = 12.0 m:
Two Push-Pull Props RS 1000.

Required components:

1	Prop Sections HDS/HDSS
15.1	Compression Head HD
15.2	Compression Brace Spindle HD
15.3	Base Plate HD
5.1	Brace Connector HDR
16	Push-Pull Prop RS 1000
16.1	Base Plate 2 for RS 1000/1400

Example
(Fig. B3.02)

Loads
Max. permissible load independent of the inclination:
- also valid for horizontal use, for wind dynamic pressure q(z) = 0.5 kN/m²,
- steel sections F_{max} = 153 kN,
- aluminium sections F_{max} = 135 kN.

- The Base Plate HD must be verified separately.
- The bolt position depends on the inclination.

See Chapter B3 Load transfer.

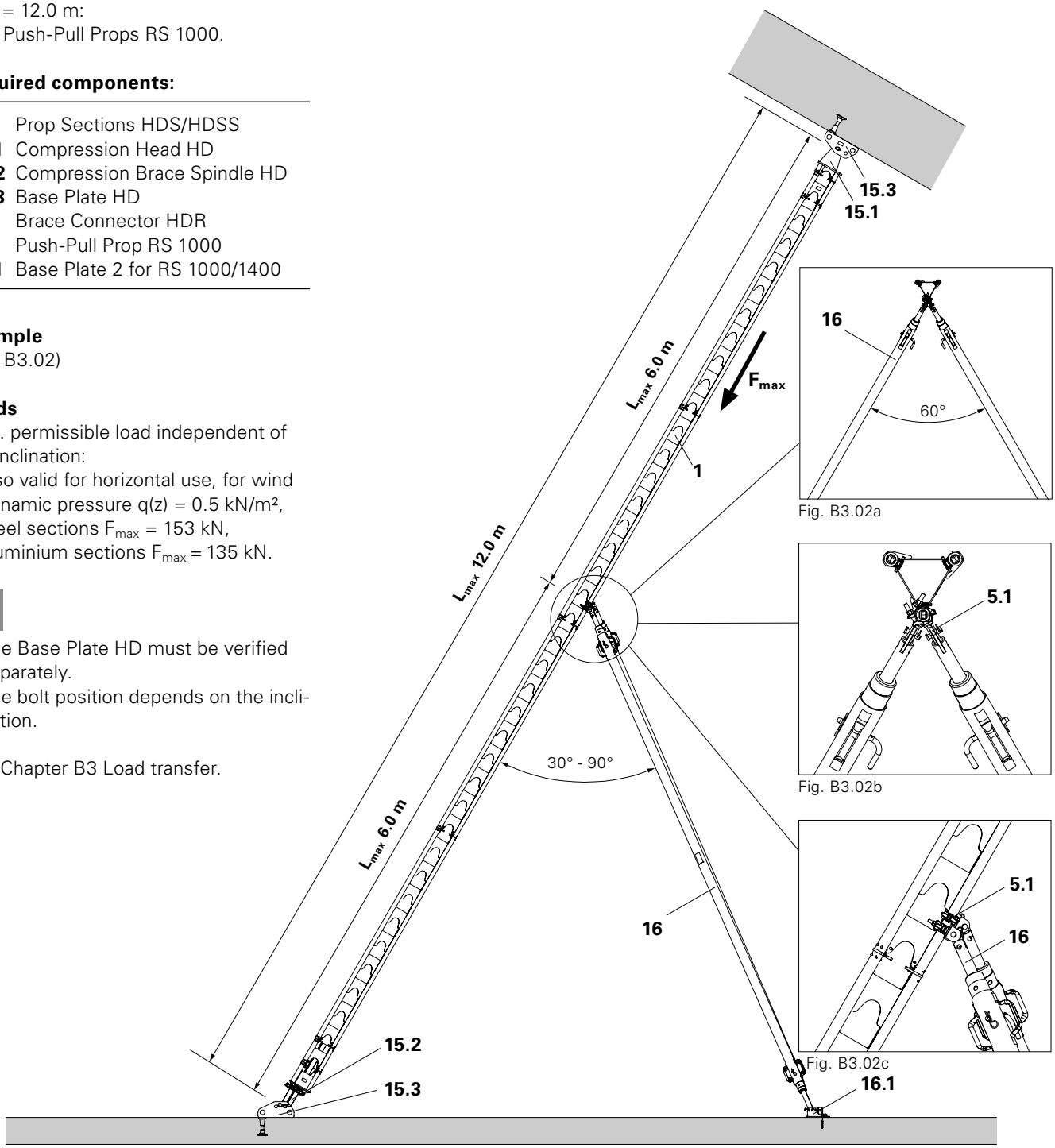

Fig. B3.02

Prop assemblies consisting of max. 9 Props HD 200 next to each other up to L_{max} = 12.0 m

Additional support
L_{max} = 12.0 m:
additional support.

Required components

1	Prop Sections HDS/HDSS
15.1	Compression Head HD
15.2	Compression Brace Spindle HD
15.3	Base Plate HD
5.7	Standard Coupling NK 48/48
16	Push-Pull Prop RS 1000
16.1	Base Plate-2 RS 1000/1400
17	Steel Waler SRU U 120
18	Swivel Coupling DK 48/48
19	Scaffold Tube Steel Ø 48.3 x 3.2
20	Waler Connector FTF/SRU/RS

Quantity depends on the number of props.

Example
(Fig. B3.03)

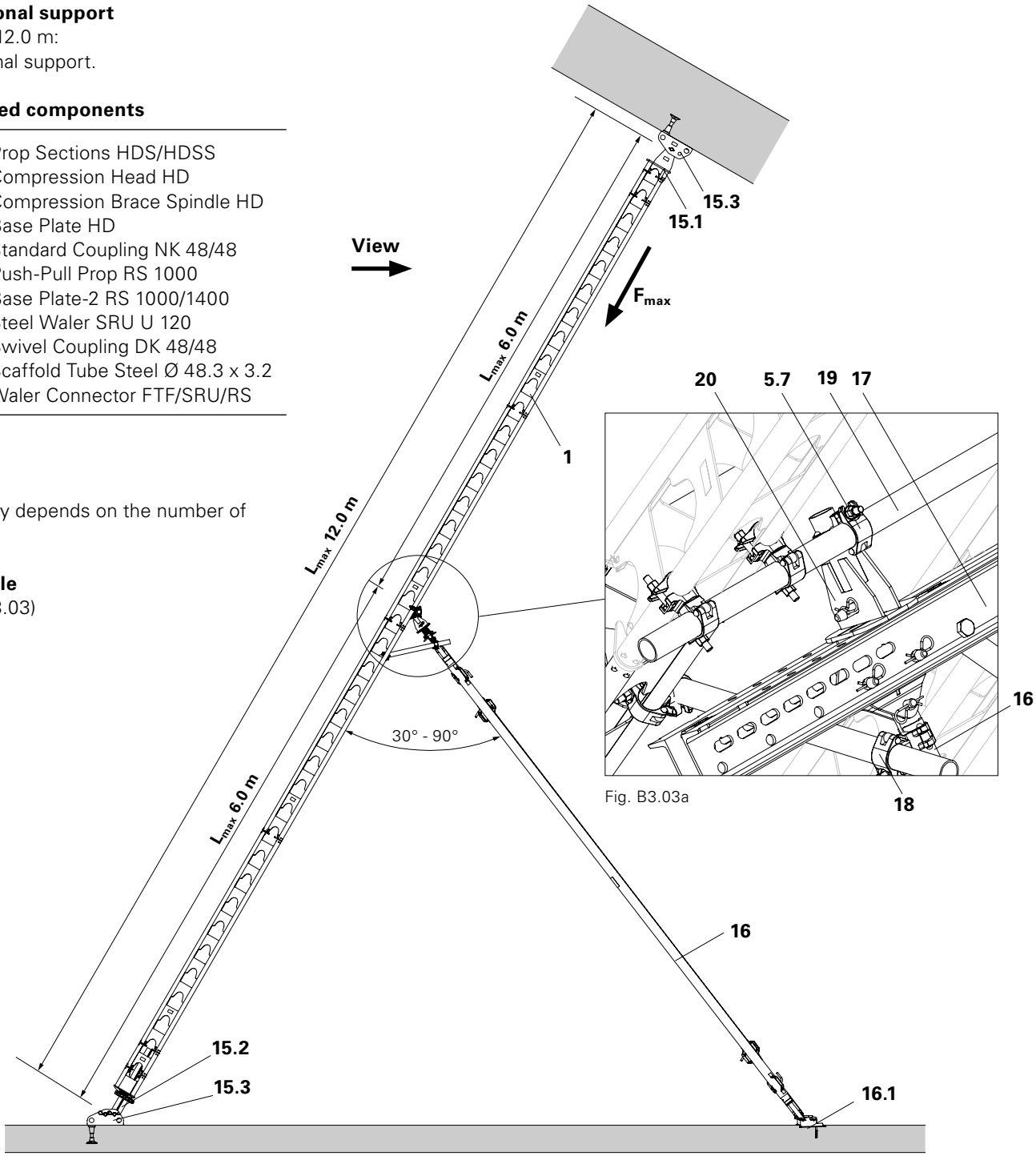

Fig. B3.03a

Fig. B3.03

Prop assemblies consisting of max. 9 Props HD 200 next to each other up to L_{max} = 12.0 m

Example
(Fig. B3.04 + B3.04a)

Loads
Max. permissible load independent of the inclination:
- also valid for horizontal use, for wind dynamic pressure q(z) = 0.5 kN/m²,
- steel sections F_{max} = 153 kN,
- aluminium sections F_{max} = 135 kN.

- Base Plate HD and Push-Pull Props must be verified separately.
- The bolt position depends on the inclination. (See Section B3 Load transfer)

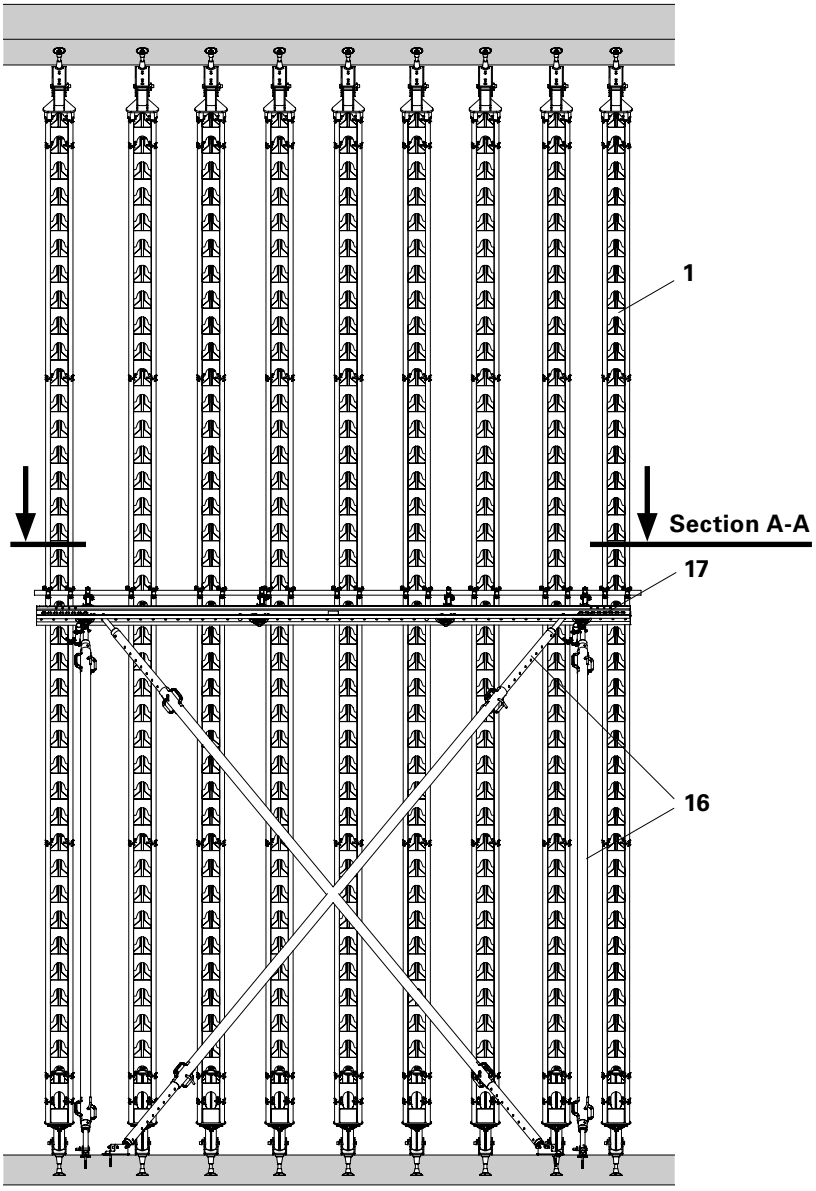

Fig. B3.04

Section A-A

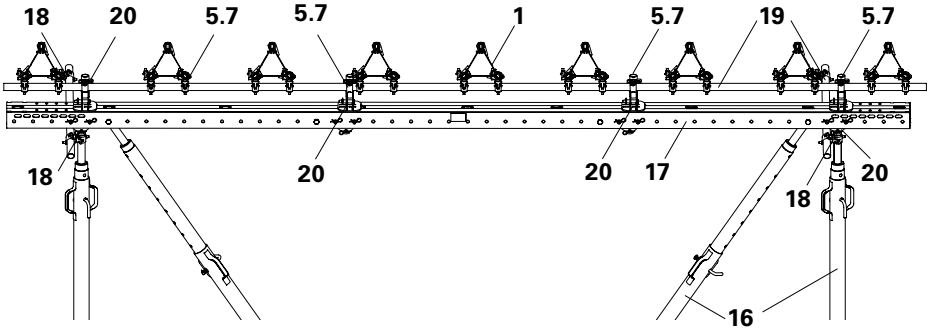

Fig. B3.04a

Bearing forces for intermediate support centrally arranged, for HD 200 Props, Aluminium

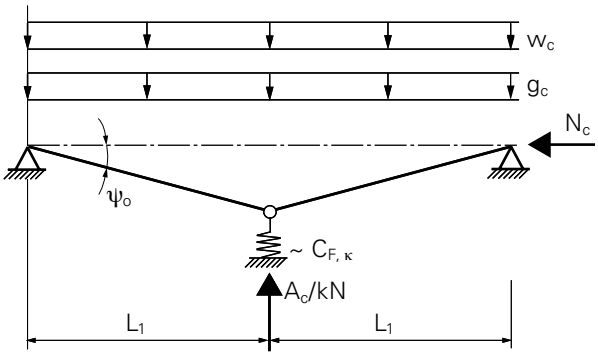

Imperfections			**L_i [m]**			
ψ_o	0.005 [-]		3.00	4.00	5.00	6.00
Loads			**characteristic spring stiffness $C_{F,k}$ [kN/cm] of the intermediate support**			
Dead load g_c	0.112 [kN/running metre]		12.30	5.19	2.66	1.54
Dynamic pressure $q_{(z)}$	0.00 [kN/m²]	**N_c [kN]**	**bearing force of the intermediate support Ac [kN]**			
c_f x A	0.24 [m²/running metre height]	50.00	0.95	1.12	1.31	1.52
red. factor	1.00 [-]	75.00	1.22	1.42	1.66	1.94
w_c	0.00 [kN/m]	100.00	1.51	1.75	2.04	2.37
		125.00	1.80	2.09	2.46	2.68
		150.00	2.11	2.45	2.83	3.01
Dynamic pressure $q_{(z)}$	0.20 [kN/m²]	50.00	1.13	1.37	1.64	1.93
c_f x A	0.24 [m²/running metre height]	75.00	1.41	1.68	2.00	2.37
red. factor	1.00 [-]	100.00	1.70	2.01	2.40	2.83
w_c	0.05 [kN/m]	125.00	2.00	2.36	2.84	3.15
		150.00	2.31	2.73	3.21	3.47
Dynamic pressure $q_{(z)}$	0.50 [kN/m²]	50.00	1.41	1.75	2.13	2.54
c_f x A	0.24 [m²/running metre height]	75.00	1.70	2.08	2.51	3.03
red. factor	1.00 [-]	100.00	1.99	2.42	2.94	3.52
w_c	0.12 [kN/m]	125.00	2.29	2.78	3.41	3.84
		150.00	2.60	3.16	3.79	4.16
Dynamic pressure $q_{(z)}$	0.80 [kN/m²]	50.00	1.69	2.13	2.62	3.16
c_f x A	0.24 [m²/running metre height]	75.00	1.98	2.47	3.03	3.69
red. factor	1.00 [-]	100.00	2.28	2.82	3.48	4.22
w_c	0.19 [kN/m]	125.00	2.58	3.19	3.97	4.53
		150.00	2.90	3.59	4.37	4.86
Dynamic pressure $q_{(z)}$	1.10 [kN/m²]	50.00	1.97	2.51	3.11	3.77
c_f x A	0.24 [m²/running metre height]	75.00	2.26	2.86	3.54	4.35
red. factor	1.00 [-]	100.00	2.56	3.22	4.02	4.91
w_c	0.26 [kN/m]	125.00	2.87	3.61	4.54	5.23
		150.00	3.20	4.02	4.95	5.55
Dynamic pressure $q_{(z)}$	1.30 [kN/m²]	50.00	2.15	2.77	3.43	4.18
c_f x A	0.24 [m²/running metre height]	75.00	2.45	3.12	3.88	4.79
red. factor	1.00 [-]	100.00	2.75	3.49	4.37	5.37
w_c	0.31 [kN/m]	125.00	3.07	3.88	4.92	5.69
		150.00	3.39	4.30	5.33	6.01

B3 Inclined Compression Heads

Bearing forces for intermediate support centrally arranged, for HD 200 Props, Steel

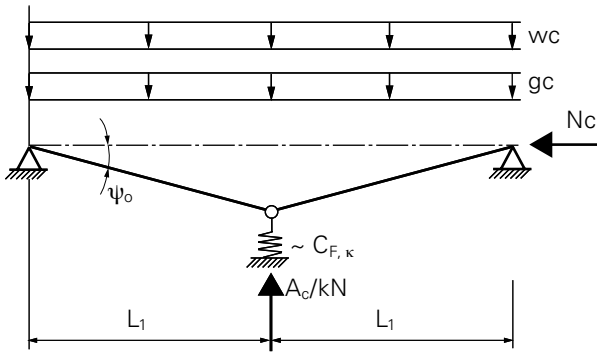

Imperfections				**Li [m]**			
ψ_o	0.005	[-]		3.00	4.00	5.00	6.00	7.00
Loads				**characteristic spring stiffness $C_{F,k}$ [kN/cm] of the intermediate support**				
Dead load gc	0.31	[kN/running metre]		36.70	15.48	7.93	4.59	2.89
Dynamic pressure $q_{(z)}$	0.00	[kN/m²]	**N_c [kN]**	**bearing force of the intermediate support A_c [kN]**				
c_f x A	0.24	[m²/running metre height]	50.00	1.68	2.09	2.51	2.94	3.40
red. factor	1.00	[-]	75.00	1.94	2.36	2.80	3.27	3.77
w_c	0.00	[kN/m]	100.00	2.21	2.64	3.11	3.61	4.17
			125.00	2.47	2.93	3.43	3.97	4.59
			150.00	2.74	3.22	3.75	4.35	5.03
Dynamic pressure $q_{(z)}$	0.20	[kN/m²]	50.00	1.86	2.33	2.82	3.32	3.84
c_f x A	0.24	[m²/running metre height]	75.00	2.12	2.61	3.12	3.65	4.23
red. factor	1.00	[-]	100.00	2.39	2.89	3.43	4.01	4.64
w_c	0.05	[kN/m]	125.00	2.66	3.18	3.75	4.37	5.07
			150.00	2.93	3.48	4.08	4.76	5.54
Dynamic pressure $q_{(z)}$	0.50	[kN/m²]	50.00	2.13	2.70	3.28	3.88	4.51
c_f x A	0.24	[m²/running metre height]	75.00	2.40	2.98	3.59	4.23	4.91
red. factor	1.00	[-]	100.00	2.67	3.27	3.90	4.59	5.34
w_c	0.12	[kN/m]	125.00	2.94	3.56	4.23	4.97	5.80
			150.00	3.21	3.86	4.57	5.37	6.29
Dynamic pressure $q_{(z)}$	0.80	[kN/m²]	50.00	2.14	3.06	3.74	4.44	5.17
c_f x A	0.24	[m²/running metre height]	75.00	2.67	3.35	4.06	4.80	5.60
red. factor	1.00	[-]	100.00	2.94	3.64	4.38	5.18	6.05
w_c	0.19	[kN/m]	125.00	3.21	3.93	4.71	5.57	6.53
			150.00	3.49	4.24	5.06	5.98	7.04
Dynamic pressure $q_{(z)}$	1.10	[kN/m²]	50.00	2.68	3.43	4.20	5.00	5.84
c_f x A	0.24	[m²/running metre height]	75.00	2.95	3.72	4.53	5.38	6.29
red. factor	1.00	[-]	100.00	3.22	4.01	4.86	5.77	6.76
w_c	0.26	[kN/m]	125.00	3.49	4.31	5.20	6.17	7.26
			150.00	3.77	4.62	5.55	6.60	7.79
Dynamic pressure $q_{(z)}$	1.30	[kN/m²]	50.00	2.86	3.68	4.51	5.38	6.28
c_f x A	0.24	[m²/running metre height]	75.00	3.13	3.97	4.84	5.76	6.74
red. factor	1.00	[-]	100.00	3.40	4.26	5.17	6.16	7.23
w_c	0.31	[kN/m]	125.00	3.67	4.56	5.52	6.57	7.75
			150.00	3.95	4.87	5.88	7.00	8.30

Individual props with Prop Sections HD 200 L_{max} = 12.0 m up to L_{max} = 18.0 m

Additional support
Over 6.0 m: Push-Pull Props must be installed at least every 6.0 m. The maximum prop length is 18.0 m.
L_{max} = 18.0 m:
2 x 2 Push-Pull Props RS 1000.

Required components

1	Prop Sections HDS/HDSS
15.1	Compression Head HD
15.2	Compression Brace Spindle HD
15.3	Base Plate HD
5.1	Brace Connector HDR
5.7	Standard Coupling NK 48/48
16	Push-Pull Prop RS 1000
16.1	Base Plate 2 for RS 1000/1400

Quantity depends on the number of props.

Example
(Fig. B3.05)

Loads
Max. permissible load independent of the inclination:
- also valid for horizontal use, for wind dynamic pressure q(z) = 0.5 kN/m².
- steel sections F_{max} = 153 kN.
- aluminium sections F_{max} = 135 kN.

- Base Plate HD and Push-Pull Props must be verified separately.
- The bolt position depends on the inclination.
  (See Section B3)

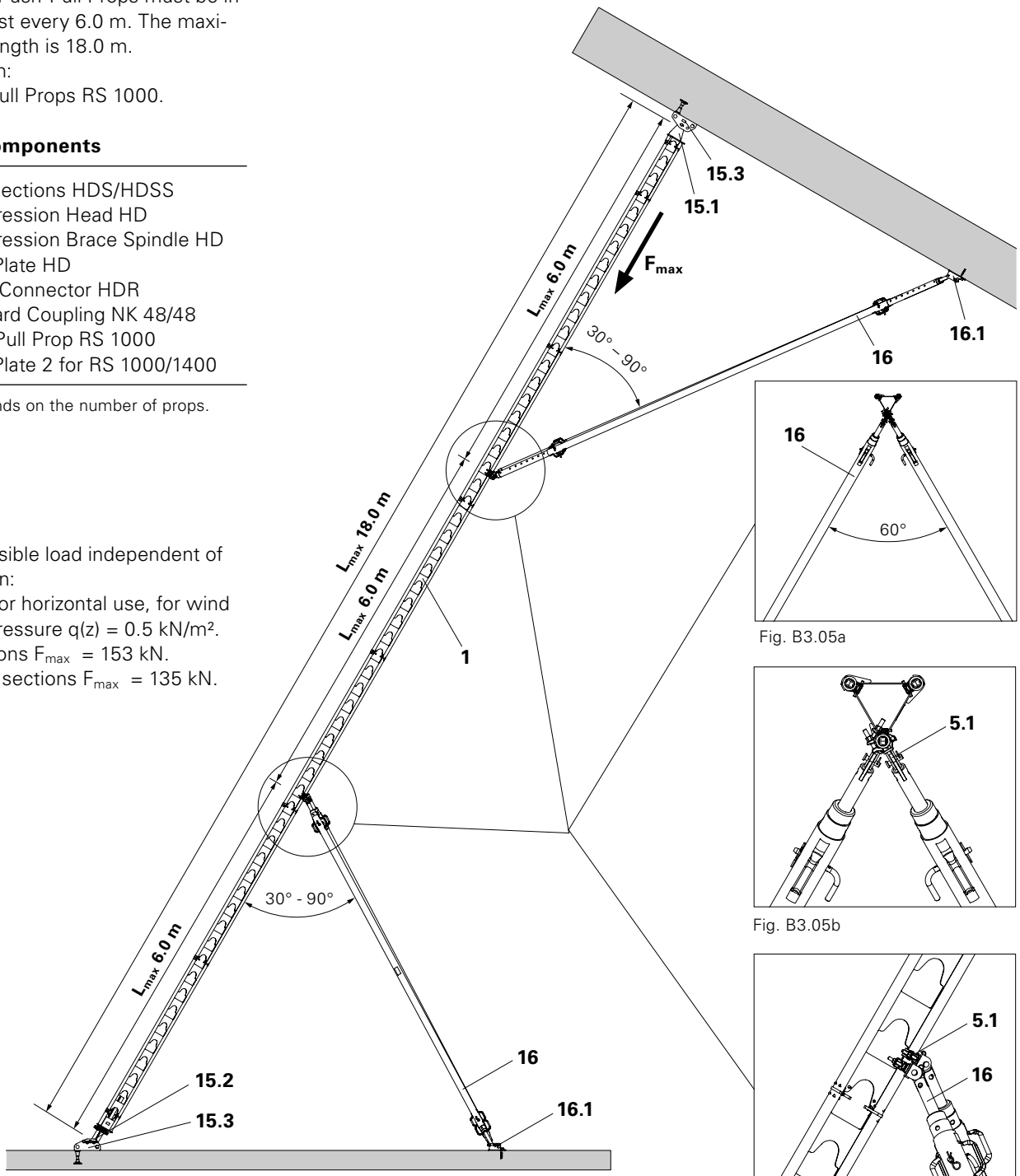

Fig. B3.05

Fig. B3.05a

Fig. B3.05b

Fig. B3.05c

Prop assemblies consisting of max. 9 Props HD 200 next to each other up to L_{max} = 18.0 m

Additional support
Over 6.0 m: Push-Pull Props must be installed at least every 6.0 m. The maximum prop length is 18.0 m.
L_{max} = 18.0 m:
additional support.

Required components

1	Prop Sections HDS/HDSS
15.1	Compression Head HD
15.2	Compression Brace Spindle HD
15.3	Base Plate HD
5.3	Standard Coupling NK 48/48
16	Push-Pull Prop RS 1000
16.1	Base Plate 2 for RS 1000/1400
17	Steel Waler SRU U 120
18	Swivel Coupling DK 48/48
19	Scaffold Tube Steel Ø 48.3 x 3.2
20	Waler Connector FTF/SRU/RS

Quantity depends on the number of props.

Example
(Fig. B3.06)

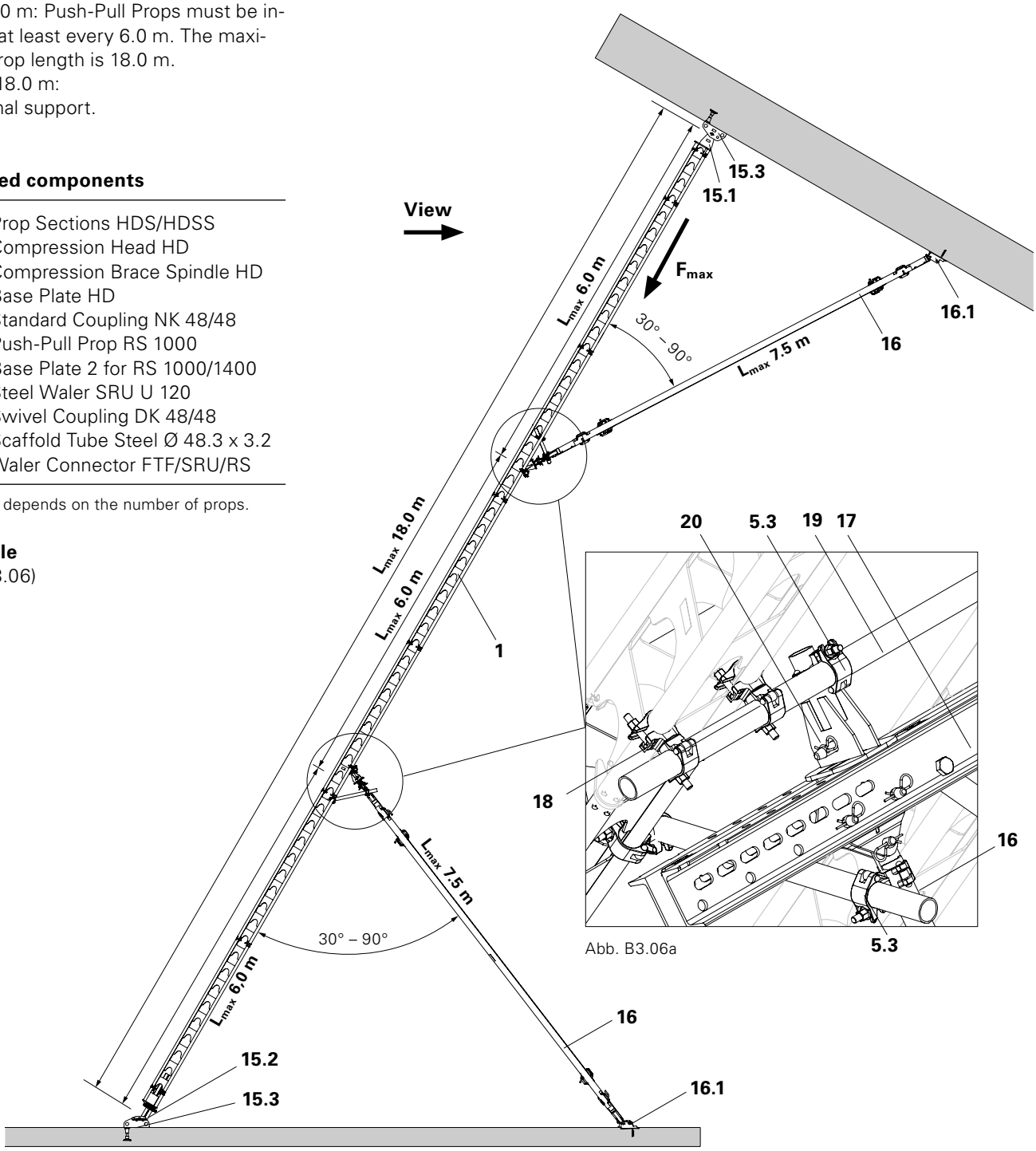

Abb. B3.06a

Fig. B3.06

Prop assemblies consisting of max. 9 Props HD 200 next to each other up to L_{max} = 18.0 m

Example
(Fig. B3.07 + B3.07a)
View of B3.06.

Loads
Max. permissible load independent of the inclination:
- also valid for horizontal use, for wind dynamic pressure q(z) = 0.5 kN/m².
- steel sections F_{max} = 153 kN.
- aluminium sections F_{max} = 135 kN.

- Base Plate HD and Push-Pull Props must be verified separately.
- The bolt position depends on the inclination.

See B3 Load transfer

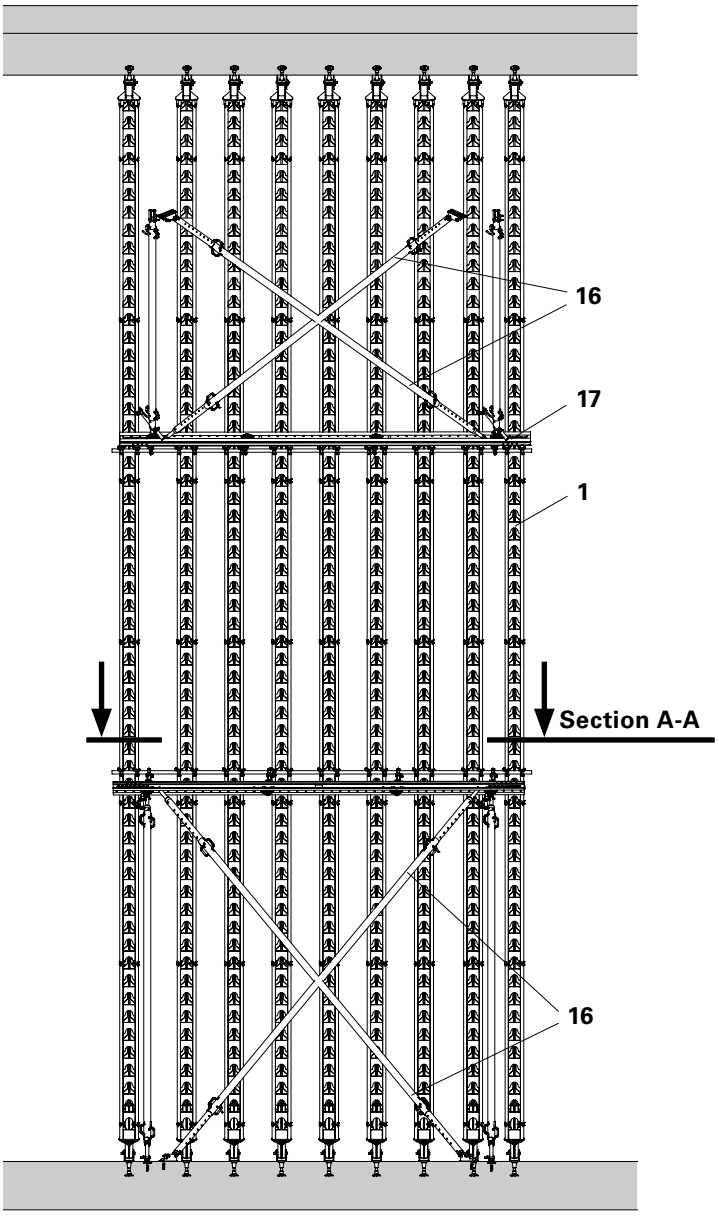

Fig. B3.07

Section A-A

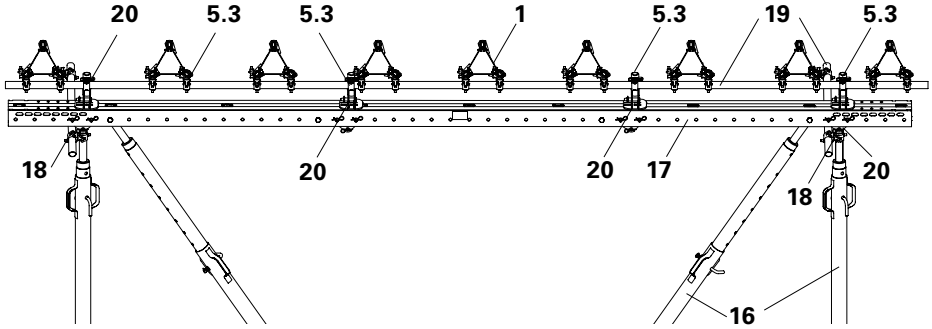

Fig. B3.07a

Bearing forces for intermediate support at the third points, for HD 200 Props, Aluminium

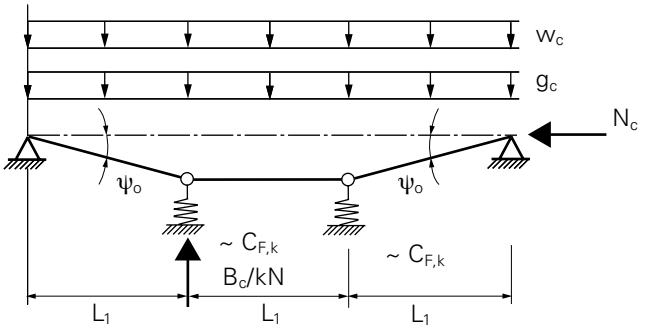

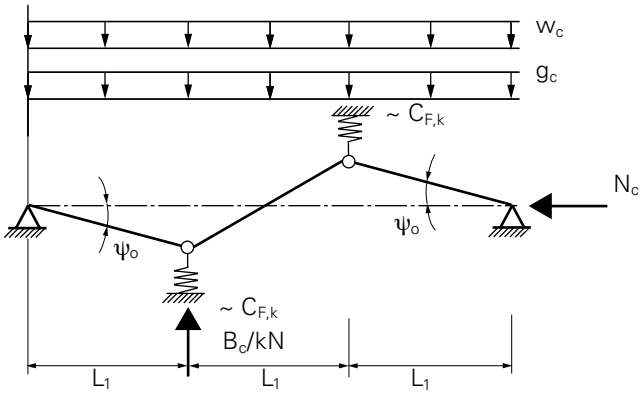

Imperfections				L_i [m]			
ψ_o	0.005	[-]		3.00	4.00	5.00	6.00
Loads				**characteristic spring stiffness $C_{F,k}$ [kN/cm] of the intermediate support**			
Dead load g_c	0.112	[kN/running metre]		18.44	7.78	3.98	2.31
Dynamic pressure $q_{(z)}$	0.00	[kN/m²]	**N_c [kN]**	**bearing force of the intermediate support B_c [kN]**			
c_f x A	0.24	[m²/running metre height]	50.00	1.15	1.31	1.49	1.69
red. factor	1.00	[-]	75.00	1.56	1.76	1.99	2.27
w_c	0.00	[kN/m]	100.00	1.99	2.23	2.54	2.88
			125.00	2.43	2.73	3.14	3.36
			150.00	2.88	3.26	3.68	3.84
Dynamic pressure $q_{(z)}$	0.20	[kN/m²]	50.00	1.32	1.54	1.78	2.05
c_f x A	0.24	[m²/running metre height]	75.00	1.73	1.99	2.29	2.66
red. factor	1.00	[-]	100.00	2.16	2.47	2.85	3.28
w_c	0.05	[kN/m]	125.00	2.60	2.97	3.47	3.77
			150.00	3.05	3.51	4.02	4.25
Dynamic pressure $q_{(z)}$	0.50	[kN/m²]	50.00	1.56	1.87	2.21	2.59
c_f x A	0.24	[m²/running metre height]	75.00	1.98	2.33	2.74	3.23
red. factor	1.00	[-]	100.00	2.41	2.82	3.33	3.90
w_c	0.12	[kN/m]	125.00	2.85	3.34	3.97	4.38
			150.00	3.31	3.89	4.53	4.86
Dynamic pressure $q_{(z)}$	0.80	[kN/m²]	50.00	1.81	2.20	2.64	3.13
c_f x A	0.24	[m²/running metre height]	75.00	2.23	2.68	3.19	3.81
red. factor	1.00	[-]	100.00	2.66	3.17	3.80	4.51
w_c	0.19	[kN/m]	125.00	3.11	3.70	4.47	4.99
			150.00	3.57	4.27	5.04	5.47
Dynamic pressure $q_{(z)}$	1.10	[kN/m²]	50.00	2.05	2.54	3.07	3.67
c_f x A	0.24	[m²/running metre height]	75.00	2.48	3.02	3.65	4.39
red. factor	1.00	[-]	100.00	2.91	3.53	4.28	5.12
w_c	0.26	[kN/m]	125.00	3.37	4.07	4.97	5.60
			150.00	3.83	4.64	5.55	6.08
Dynamic pressure $q_{(z)}$	1.30	[kN/m²]	50.00	2.22	2.76	3.36	4.03
c_f x A	0.24	[m²/running metre height]	75.00	2.64	3.25	3.95	4.78
red. factor	1.00	[-]	100.00	3.08	3.76	4.59	5.52
w_c	0.31	[kN/m]	125.00	3.54	4.31	5.31	6.01
			150.00	4.01	4.89	5.89	6.49

Bearing forces for intermediate support at the third points, for HD 200 Props, Steel

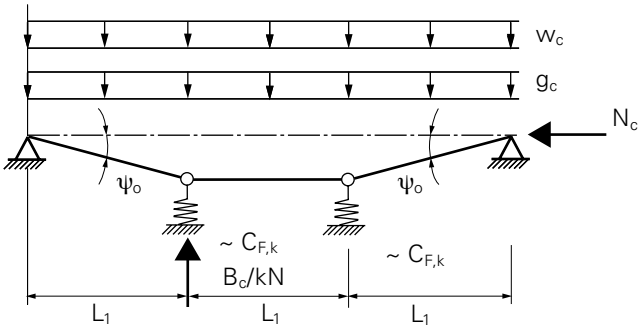

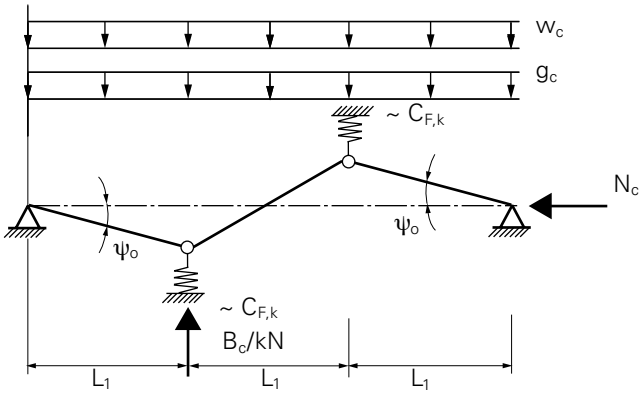

Imperfections			**L_i [m]**				
ψ_o	0.005 [-]		3.00	4.00	5.00	6.00	7.00
Loads			**characteristic spring stiffness $C_{F,k}$ [kN/cm] of the intermediate support**				
Dead load g_c	0.31 [kN/running metre]		55.07	23.23	11.90	6.88	4.34
Dynamic pressure $q_{(z)}$	0.00 [kN/m²]	**N_c [kN]**	**bearing force of the intermediate support B_c [kN]**				
c_f x A	0.24 [m²/running metre height]	50.00	1.79	2.15	2.53	2.91	3.32
red. factor	1.00 [-]	75.00	2.18	2.56	2.95	3.37	3.82
w_c	0.00 [kN/m]	100.00	2.57	2.97	3.39	3.85	4.36
		125.00	2.97	3.39	3.85	4.36	4.93
		150.00	3.37	3.82	4.31	4.88	5.54
Dynamic pressure $q_{(z)}$	0.20 [kN/m²]	50.00	1.95	2.37	2.80	3.24	3.71
c_f x A	0.24 [m²/running metre height]	75.00	2.34	2.77	3.23	3.71	4.23
red. factor	1.00 [-]	100.00	2.74	3.19	3.67	4.20	4.78
w_c	0.05 [kN/m]	125.00	3.13	3.61	4.13	4.71	5.36
		150.00	3.54	4.04	4.60	5.24	5.98
Dynamic pressure $q_{(z)}$	0.50 [kN/m²]	50.00	2.19	2.69	3.20	3.74	4.29
c_f x A	0.24 [m²/running metre height]	75.00	2.58	3.10	3.64	4.22	4.83
red. factor	1.00 [-]	100.00	2.98	3.52	4.09	4.71	5.40
w_c	0.12 [kN/m]	125.00	3.38	3.94	4.56	5.24	6.00
		150.00	3.78	4.38	5.03	5.78	6.64
Dynamic pressure $q_{(z)}$	0.80 [kN/m²]	50.00	2.43	3.01	3.61	4.23	4.88
c_f x A	0.24 [m²/running metre height]	75.00	2.82	3.43	4.05	4.72	5.43
red. factor	1.00 [-]	100.00	3.22	3.85	4.51	5.23	6.02
w_c	0.19 [kN/m]	125.00	3.62	4.27	4.98	5.76	6.64
		150.00	4.03	4.71	5.47	6.32	7.31
Dynamic pressure $q_{(z)}$	1.10 [kN/m²]	50.00	2.67	3.33	4.02	4.73	5.47
c_f x A	0.24 [m²/running metre height]	75.00	3.07	3.75	4.47	5.23	6.04
red. factor	1.00 [-]	100.00	3.46	4.17	4.93	5.75	6.64
w_c	0.26 [kN/m]	125.00	3.87	4.60	5.41	6.29	7.29
		150.00	4.27	5.04	5.90	6.86	7.97
Dynamic pressure $q_{(z)}$	1.30 [kN/m²]	50.00	2.83	3.55	4.29	5.06	5.86
c_f x A	0.24 [m²/running metre height]	75.00	3.23	3.97	4.74	5.56	6.44
red. factor	1.00 [-]	100.00	3.63	4.39	5.21	6.09	7.06
w_c	0.31 [kN/m]	125.00	4.03	4.83	5.69	6.64	7.71
		150.00	4.44	5.27	6.19	7.22	8.41

Load transfer via the Base Plate HD

Angle-dependent arrangement of the Compression Brace Spindle HD in the Base Plate HD.

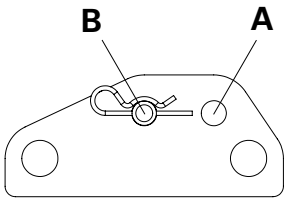

Standard: load transfer into the concrete by means of Screw-On Cone M30/DW 26.

Required components

15.2	Compression Brace Spindle HD	1x
15.3	Base Plate HD	1x
21	Screw-On Cone M30/DW 26	1x

(Fig. B3.08)

h = thickness of the concrete slab.
α = connection angle measured from horizontal axis.

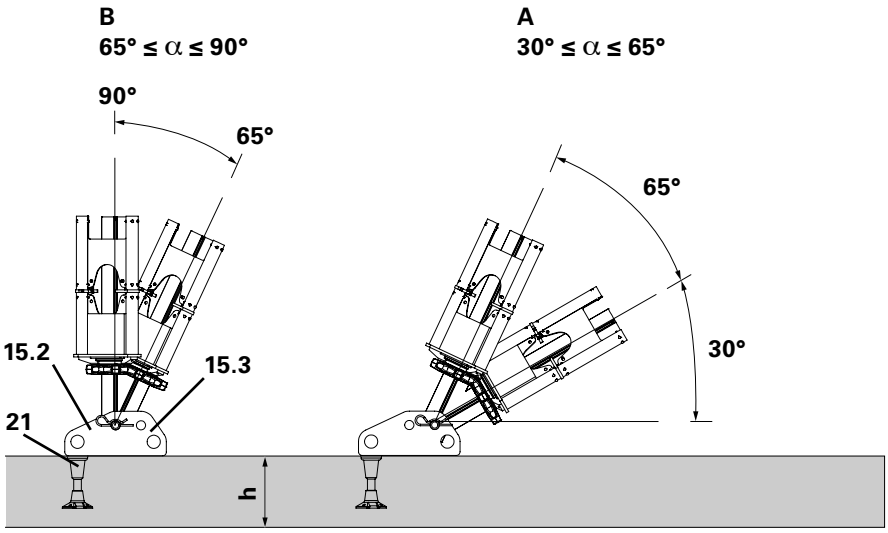

Fig. B3.08

Load transfer via the Base Plate HD

Framework conditions

Connecting the Base Plate HD (15.3) to the Screw-On Cone M30/DW 26 (21). (Fig. B3.09)

Screw-On Cone M30/DW 26

- The minimum axis distance of the Screw-On Cones M30/DW 26 from each other is s ≥ 100 cm.
- The minimum lateral edge distance (vertical to the level of the props) of the Screw-On Cones M30/ DW 26 is c_2 ≥ 120 cm.
- The minimum edge distance at the top and bottom (at the level of the props) of the Screw-On Cones M30/ DW 26 is c_1 ≥ 110 cm.
- Under these boundary conditions, the Screw-On Cone M30/DW 26 can transfer the loads; see following tables. (Fig. B3.10)

Base Plate

The Base Plate HD has to lie completely flat on the concrete components.

Reinforcement

In the area of those concrete components requiring support, reinforcement of min. as = 3.77 cm²/m is required crosswise as well as an additional 3 x Ø 10 every 15 cm crosswise below the Base Plate HD.

Base Plate HD top view

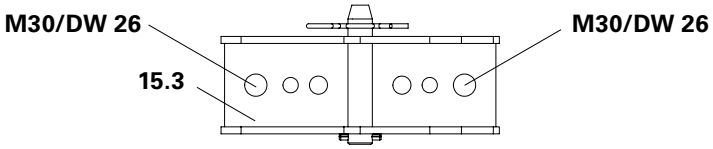

Fig. B3.09

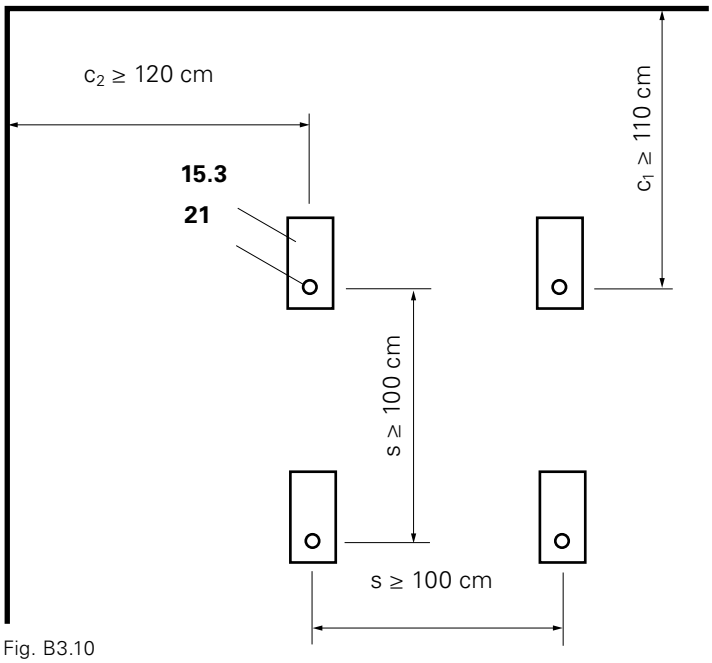

Fig. B3.10

Load transfer via the Base Plate HD

The specified forces can be transferred into the concrete with the corresponding strength f_{ck}.

h = thickness of the concrete slab.
α = connection angle measured from horizontal axis.

Bolts in hole	$f_{c,k}$ = 20 N/mm² perm. N [kN]				
	α [°]	h = 18 cm	h = 25 cm	h = 40 cm	h = 70 cm
B	90.0	73.5	100.0	112.0	127.0
	85.0	73.7	89.0	100.0	115.0
	80.0	74.3	81.0	92.0	101.0
	75.0	70.0	75.0	86.0	92.0
	70.0	66.0	72.0	82.0	85.0
A	65.0	63.0	69.0	79.0	79.0
	60.0	76.0	82.0	94.0	99.0
	55.0	89.3	97.0	110.0	122.0
	50.0	95.9	122.0	123.6	123.6
	45.0	103.9	107.0	107.0	107.0
	40.0	94.9	94.9	94.9	94.9
	35.0	85.9	85.9	85.9	85.9
	30.0	79.0	79.0	79.0	79.0

Load transfer via the Base Plate HD

The specified forces can be transferred into the concrete with the corresponding strength f_{ck}.

h = thickness of the concrete slab.
α = connection angle measured from horizontal axis.

Bolts in hole	$f_{c,k}$ = 30 N/mm² perm. N [kN]				
	α [°]	h = 18 cm	h = 25 cm	h = 40 cm	h = 70 cm
B	90.0	84.1	142.1	142.1	153.0
	85.0	84.4	133.0	142.7	153.0
	80.0	85.0	121.0	138.0	151.0
	75.0	84.3	112.0	129.0	138.0
	70.0	84.5	108.0	123.0	127.0
A	65.0	85.8	103.0	118.0	118.0
	60.0	93.2	123.0	141.0	148.0
	55.0	102.2	145.0	147.7	147.7
	50.0	109.8	123.6	123.6	123.6
	45.0	107.0	107.0	107.0	107.0
	40.0	94.9	94.9	94.9	94.9
	35.0	85.9	85.9	85.9	85.9
	30.0	79.0	79.0	79.0	79.0

Load transfer via the Base Plate HD

The specified forces can be transferred into the concrete with the corresponding strength f_{ck}.

h = thickness of the concrete slab.
α = connection angle measured from horizontal axis.

Bolts in hole	$f_{c,k}$ = 40 N/mm² perm. N [kN]				
	α [°]	h = 18 cm	h = 25 cm	h = 40 cm	h = 70 cm
B	90.0	92.6	153.0	153.0	153.0
	85.0	92.9	153.0	153.0	153.0
	80.0	93.6	153.0	153.0	153.0
	75.0	92.7	150.0	153.0	153.0
	70.0	93.1	144.0	153.0	153.0
A	65.0	94.4	138.0	153.0	153.0
	60.0	102.6	153.0	153.0	153.0
	55.0	112.5	147.7	147.7	147.7
	50.0	120.8	123.6	123.6	123.6
	45.0	107.0	107.0	107.0	107.0
	40.0	94.9	94.9	94.9	94.9
	35.0	85.9	85.9	85.9	85.9
	30.0	79.0	79.0	79.0	79.0

HD 200 Heavy-Duty Prop Restrained at the Top

Prop Sections HDS Alu:
Permissible prop load according to the Type Test

- here, a maximum of two 90 sections and two 30 sections may be installed.
- the 90 aluminium section may be replaced by steel.
- intermediate values may be determined by linear interpolation.

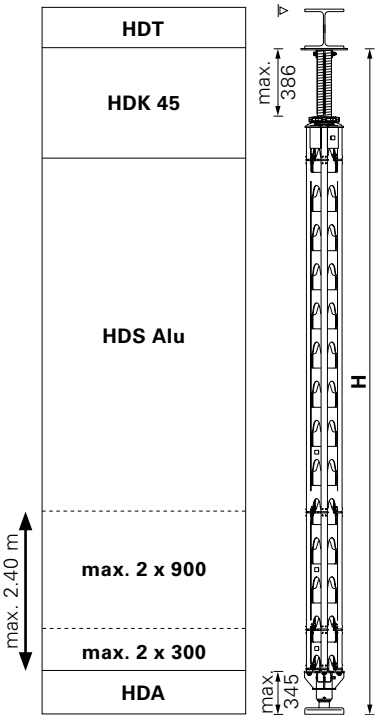

Height [cm]	perm. N [kN] $q_{(z)}$ = 0.0 kN/m²
300.0	200.0
503.4	200.0
526.0	193.1
616.0	160.2
676.0	139.2
796.0	100.2
886.0	79.3
946.0	68.3

Height [cm]	perm. N [kN] $q_{(z)}$ = 0.2 kN/m²
300.0	200.0
495.0	200.0
526.0	190.3
616.0	154.7
676.0	133.1
796.0	90.5
886.0	65.8

Height [cm]	perm. N [kN] $q_{(z)}$ = 0.5 kN/m²
300.0	200.0
483.4	200.0
526.0	186.5
616.0	145.7
676.0	122.9
796.0	68.5

Height [cm]	perm. N [kN] $q_{(z)}$ = 0.9 kN/m²
300.0	200.0
468.3	200.0
526.0	176.9
616.0	131.7
676.0	103.7

Height [cm]	perm. N [kN] $q_{(z)}$ = 1.3 kN/m²
300.0	200.0
447.7	200.0
466.0	196.5
526.0	164.9
616.0	112.6

HD 200 Heavy-Duty Prop Restrained at the Top

Height [cm]	perm. N [kN] $q_{(z)}$ = 0.0 kN/m²
600.0	200.0
877.1	200.0
886.0	198.7
916.0	194.8
946.0	184.1
1006.0	161.7
1036.0	152.9
1096.0	134.6
1126.0	127.3
1156.0	119.8
1216.0	105.9

Height [cm]	perm. N [kN] $q_{(z)}$ = 0.2 kN/m²
600.0	200.0
844.2	200.0
886.0	193.9
916.0	183.6
946.0	170.7
1006.0	145.3
1036.0	135.0
1066.0	123.7
1096.0	112.5
1126.0	102.7

Height [cm]	perm. N [kN] $q_{(z)}$ = 0.5 kN/m²
600.0	200.0
793.8	200.0
796.0	199.7
826.0	195.9
856.0	191.6
886.0	175.5
916.0	160.7
946.0	143.9
976.0	125.7

Height [cm]	perm. N [kN] $q_{(z)}$ = 0.9 kN/m²
600.0	200.0
740.9	200.0
766.0	196.2
796.0	190.8
826.0	181.1
856.0	160.5

Height [cm]	perm. N [kN] $q_{(z)}$ = 1.3 kN/m²
600.0	200.0
688.8	200.0
736.0	193.3
766.0	180.6

Prop Sections HDSS Steel:
Permissible prop load according to the Type Test.

- when using two 90 segments, no 30 segment is allowed to be used.
- when using one 90 segment, a maximum of two 30 segments may be used.
- the 90 steel segment may not be replaced by aluminium.
- intermediate values may be determined by linear interpolation.

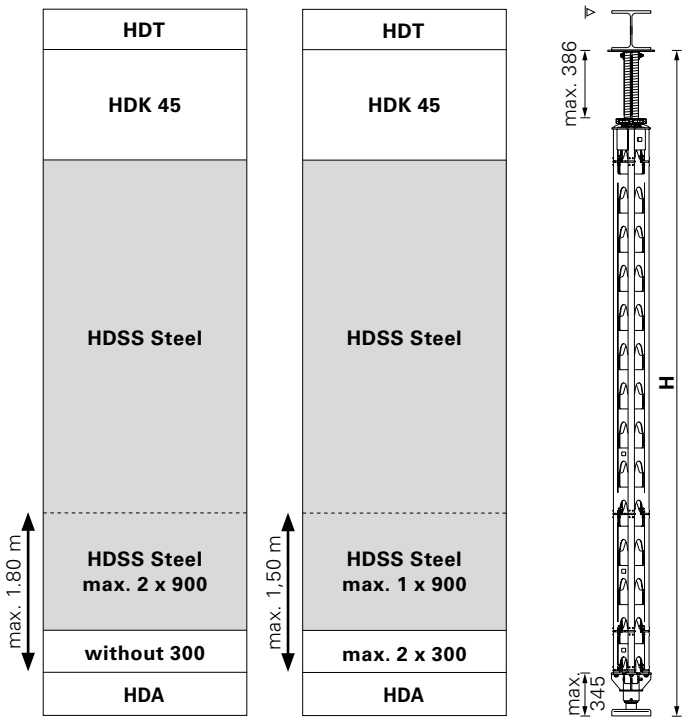

HD 200 Heavy-Duty Prop

Item no.	Weight kg	Prop Sections HDS / HDSS	L	X
022006	5.090	**Prop Section HDS 30 Alu**	340	300
022005	11.200	**Prop Section HDS 90 Alu**	940	900
022004	29.600	**Prop Section HDS 270 Alu**	2740	2700
111276	28.200	**Prop Section HDSS 90 Steel**	940	900
103993	63.500	**Prop Section HDSS 210 Steel**	2140	2100

Prop sections made of aluminium or steel. With chord couplings for connecting to other sections.

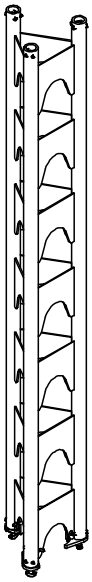

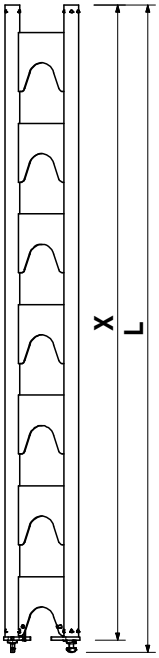

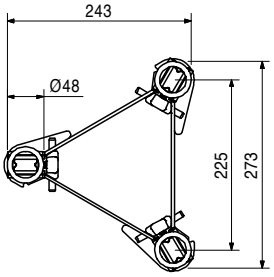

022020	3.310	**Coupling Section HD 30** With connection possibility of chord conplings on both sides e.g. when using HD 200 segments with Head Spindle HDK at both ends.

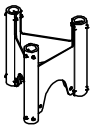

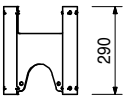

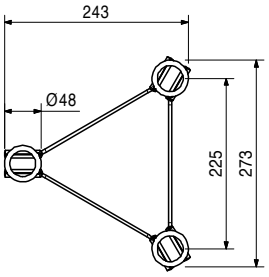

Item no.	Weight kg	
022003	32.100	**Lowering Device HDA** For easy release of higher loads with the HD 200. Lowering range max. 10 cm. Tiltable on all sides up to 3°.

Note
Follow Instructions for Assembly and Use!

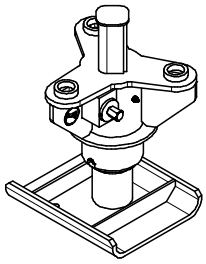

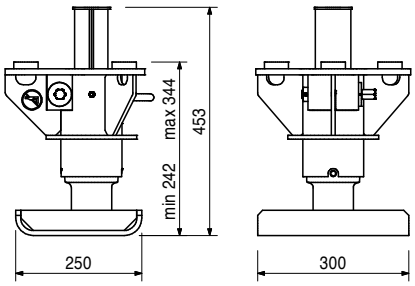

Accessories

022018	0.002	**Shear Pin HDA**

022018	0.002	**Shear Pin HDA** For mounting in the Lowering Device HDA.

022007	24.600	**Head Spindle HDK 45** Head spindle for Heavy-Duty Prop HD 200. With integrated chord couplings for connecting the chord tubes. Can be tilted up to 3° along one axis.

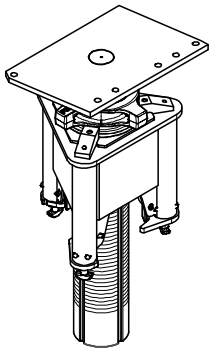

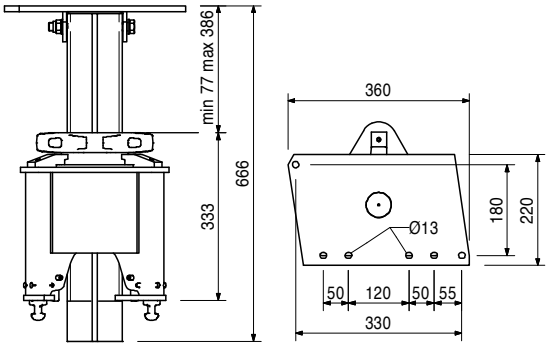

Accessories

022027	3.600	**Wing Nut Spanner HD**

022027	3.600	**Wing Nut Spanner HD** For easy release of the Head Spindle HDK 45, the Head Spindle TR 110-80/55 and the MULTIPROP slab prop.

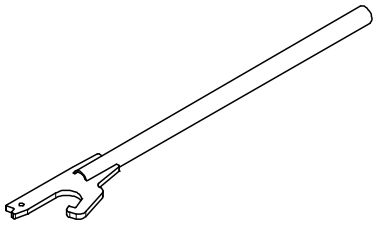

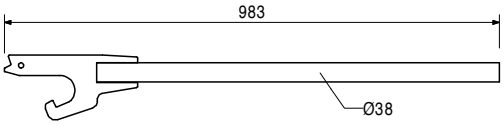

Item no.	Weight kg		
022013	0.137	**Centring Bolt HD M12, galv.** For the HD 200 system.	**Complete with** 1 pc. 710330 Nut ISO 4032 M12-8, galv.

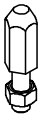

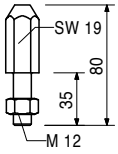

022019	18.500	**Base Adapter HD** For using HD 200 prop sections directly on Main Beams HDT when lowering function is not required e. g. travelling truss of tunnel carriage.	

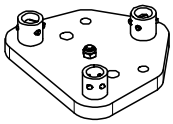

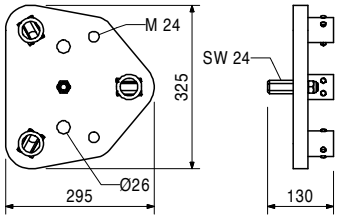

131723	1.440	**Brace Connector HDR-2** For connecting push-pull props and kicker braces to components Ø 48 mm.	**Complete with** 1 pc. 027170 Pin Ø 16 x 42, galv. 1 pc. 018060 Cotter Pin 4/1, galv.

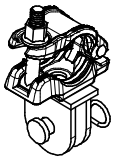

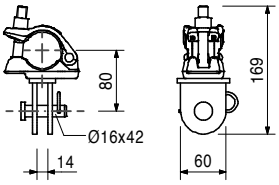

022016	1.290	**Brace Connector HDR** For connecting push-pull props and kicker braces to components Ø 48 mm.	**Complete with** 1 pc. 027170 Pin Ø 16 x 42, galv. 1 pc. 018060 Cotter Pin 4/1, galv.

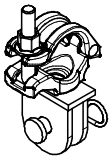

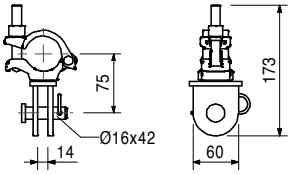

028080	2.970	**Connector Kicker/Push-Pull Prop, galv.** For connecting push-pull props and kicker braces to Main Beam HDT.	**Complete with** 1 pc. 018060 Cotter Pin 4/1, galv. 1 pc. 027170 Pin Ø 16 x 42, galv.

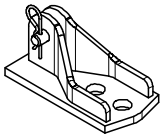

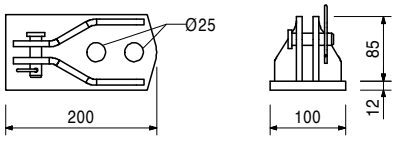

Item no.	Weight kg		
117343	3.250	**Base Plate-2 for RS 210 - 1400, galv.** For assembly of Push-Pull Props RS 210, 260, 300, 450, 650, 1000 and 1400.	**Complete with** 2 pc. 105400 Pin Ø 20 x 140, galv. 2 pc. 018060 Cotter Pin 4/1, galv.

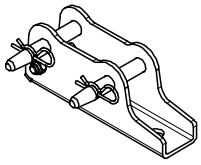

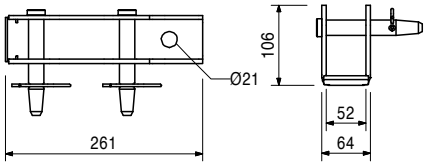

Accessories

124777	0.210	**Anchor Bolt PERI 14/20 x 130**

124777	0.210	**Anchor Bolt PERI 14/20 x 130** For temporary fixation to reinforced concrete structures.	**Note** See PERI data sheet! Drilling Ø 14 mm.

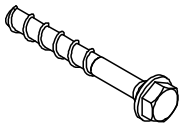

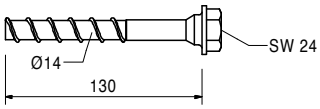

022023	21.800	**Compression Brace Spindle HD** For using Prop Sections HDS and HDSS as props (also inclined). Only in connection with Base Plate HD!

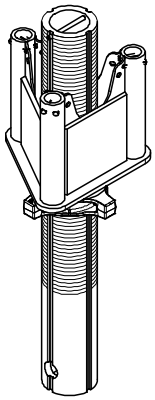

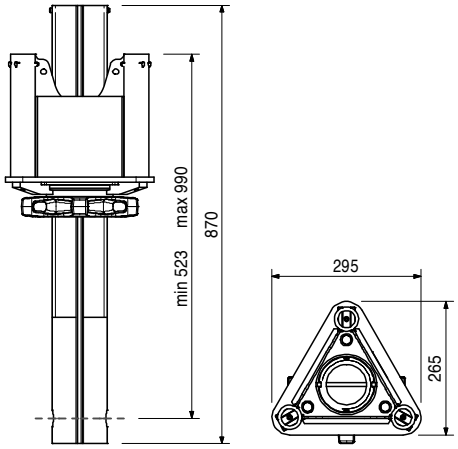

022022	22.000	**Compression Head HD** For using Prop Sections HDS and HDSS as props (also inclined).

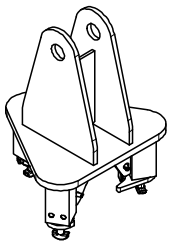

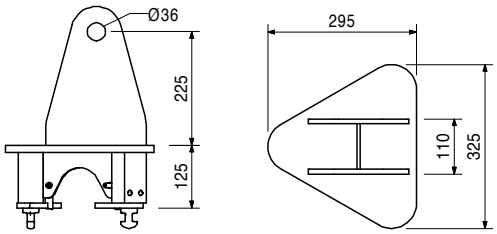

Item no.	Weight kg		
022024	13.200	**Base Plate HD** For using Prop Sections HDS and HDSS as props (also inclined).	**Complete with** 1 pc. 722465 Bolt 35 x 160, galv. 1 pc. 710304 Cotter Pin 7, galv.

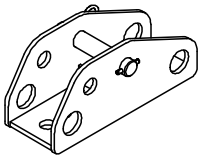

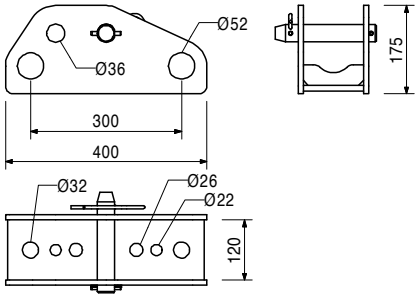

022017	5.190	**Scaffold Bracket HD 75** For assembly of working scaffold. With nailing batten.	**Complete with** 1 pc. 116292 Guardrail Post HSGP-2

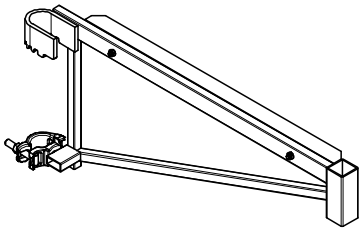

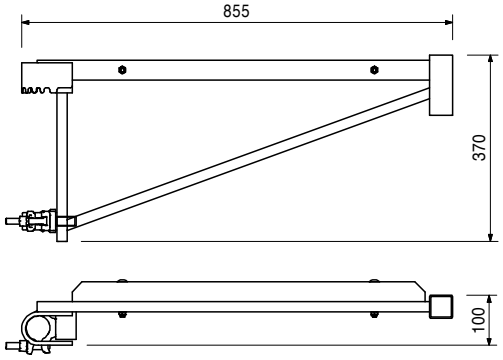

Accessories

116292	4.720	**Guardrail Post HSGP-2**

116292	4.720	**Guardrail Post HSGP-2** As guardrail for different systems.

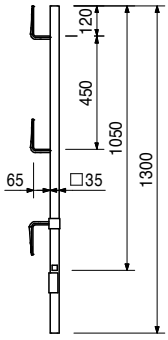

Item no.	Weight kg		
022008	1130.000	**Main Beam HDT 880** System steel girder for use with HD 200 Main Beam areas and special constructions. Profile HEB 300.	**Complete with** 1 pc. 105435 Bolt Ø 50 x 330 1 pc. 722457 Dowel Pin Ø 10 x 70, galv. 1 pc. 710618 Cotter Pin 8, galv.

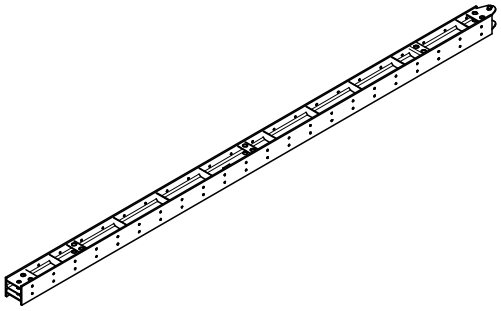

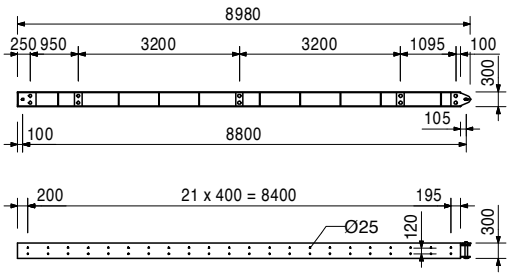

022009	582.000	**Main Beam HDT 440** System steel girder for use with HD 200 Main Beam areas and special constructions. Profile HEB 300.	**Complete with** 1 pc. 105435 Bolt Ø 50 x 330 1 pc. 722457 Dowel Pin Ø 10 x 70, galv. 1 pc. 710618 Cotter Pin 8, galv.

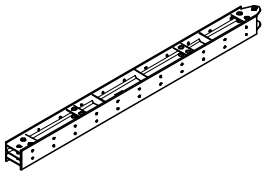

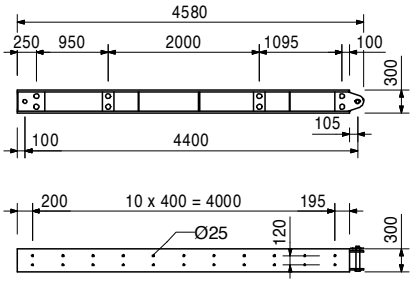

022010	379.000	**Main Beam HDT 280** System steel girder for use with HD 200 Main Beam areas and special constructions. Profile HEB 300.	**Complete with** 1 pc. 105435 Bolt Ø 50 x 330 1 pc. 722457 Dowel Pin Ø 10 x 70, galv. 1 pc. 710618 Cotter Pin 8, galv.

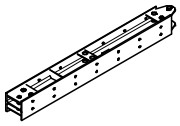

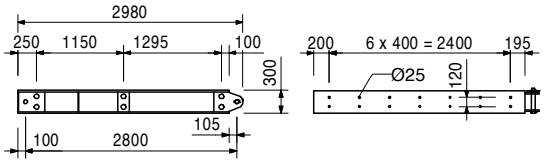

022025	1.970	**Centering Bar 40 x 20 x 400** For centering crossbeams on the Main Beam HDT.

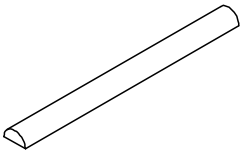

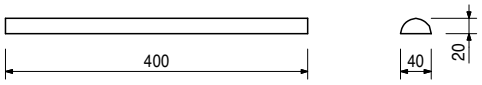

Item no.	Weight kg	
022011	13.200	**Double Anchor Tie Yoke HDD** For anchoring with Tie Rod DW 15 and DW 20.

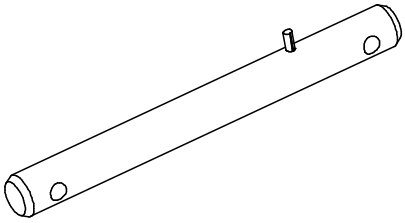

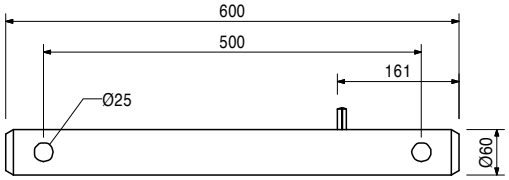

022021	31.900	**Trolley HD** For moving longitudinal girders on the Main Beam HDT.

Technical Data
Permissible load-bearing capacity 2.5 t.

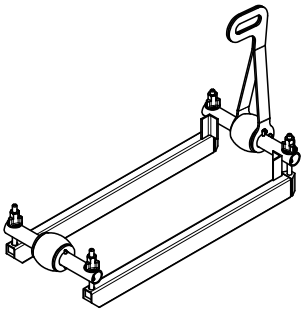

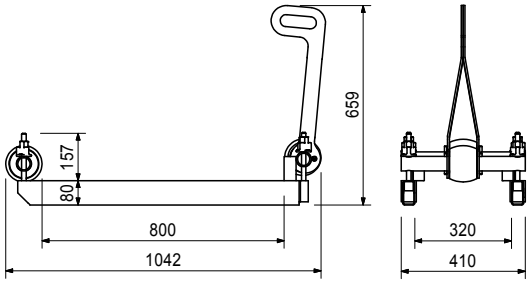

106183	2.200	**Main Beam Clamp HD 70 mm, galv.** For connecting crossed girders.

Note
Take official approval into consideration!
2 for each Head Spindle.

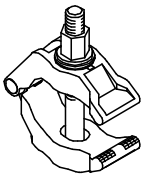

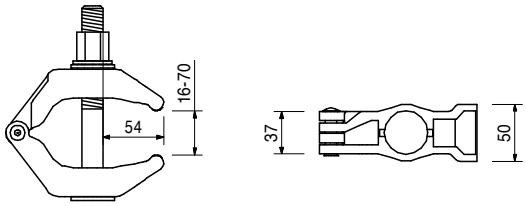

022026	1.780	**Steel Beam Clamp IPB 300 - 1000** For providing protection against tipping.

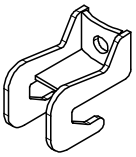

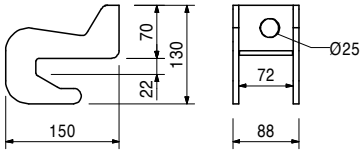

Item no.	Weight kg		
051410	11.700	**Ladder 180/6, galv.** As access for PERI Formwork Systems.	**Complete with** 4 pc. 710224 Bolt ISO 4017 M12 x 40-8.8, galv. 4 pc. 710381 Nut ISO 7042 M12-8, galv.

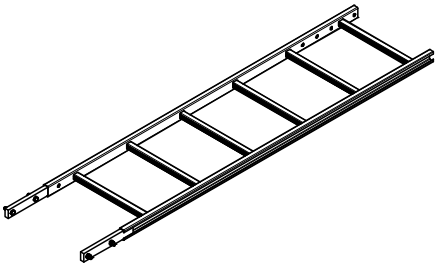

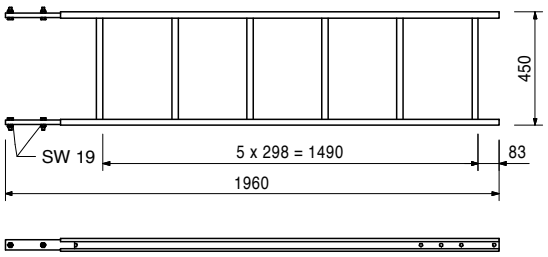

103718	0.684	**Ladder Hook, galv.** For adjusting the bottom ladder. Always use in pairs.	**Complete with** 2 pc. 710266 Bolt ISO 4017 M12 x 25-8.8, galv. 2 pc. 710381 Nut ISO 7042 M12-8, galv.

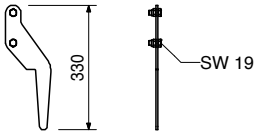

103724	10.400	**End Ladder 180/2, galv.** As access for PERI Formwork Systems.	**Complete with** 4 pc. 710224 Bolt ISO 4017 M12 x 40-8.8, galv. 4 pc. 710381 Nut ISO 7042 M12-8, galv.

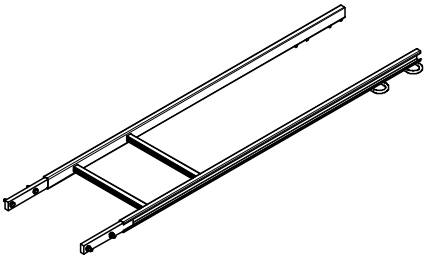

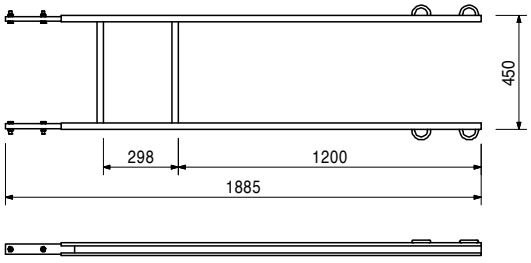

051460	2.180	**Ladder Base, galv.** As bottom ladder connection and for securing ladders against sliding on the scaffold decks.	

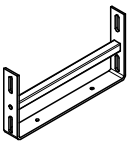

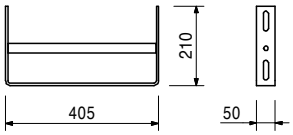

Item no.	Weight kg		
104646	4.220	**Ladder Connector HD 200** For connecting ladders to HD 200 prop sections.	**Complete with** 2 pc. 701763 Clamping Plate Fl 25 x 10 x 90 1 pc. 710266 Bolt ISO 4017 M12 x 25-8.8, galv.

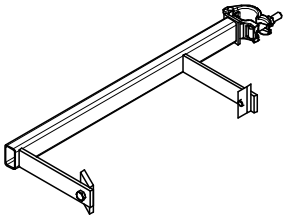

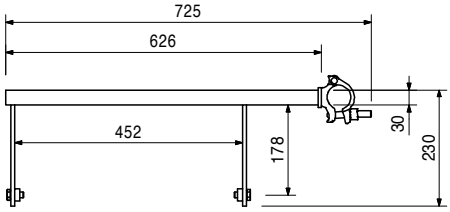

		Ladder Safety Cages, galv.	**Complete with**
104132	15.600	**Ladder Safety Cage 75, galv.**	4 pc. 710266 Bolt ISO 4017 M12 x 25-8.8, galv.
051450	25.200	**Ladder Safety Cage 150, galv.**	4 pc. 701763 Clamping Plate Fl 25 x 10 x 90
		Ladder safety cage for PERI Access Ladders.	

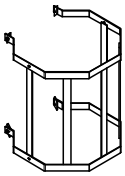

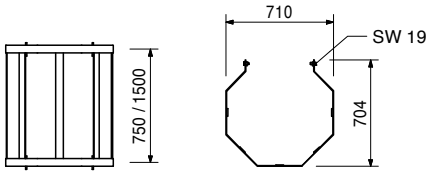

			L
		Scaffold Tubes Steel Ø 48.3 x 3.2	
026415	3.550	**Scaff. Tube Steel Ø 48.3 x 3.2, special length**	
026417	0.000	**Cutting Cost Scaffold Tube**	
026411	3.550	**Scaff. Tube Steel Ø 48.3 x 3.2, l = 1.0 m**	1000
026412	7.100	**Scaff. Tube Steel Ø 48.3 x 3.2, l = 2.0 m**	2000
026413	10.650	**Scaff. Tube Steel Ø 48.3 x 3.2, l = 3.0 m**	3000
026414	14.200	**Scaff. Tube Steel Ø 48.3 x 3.2, l = 4.0 m**	4000
026419	17.750	**Scaff. Tube Steel Ø 48.3 x 3.2, l = 5.0 m**	5000
026418	21.600	**Scaff. Tube Steel Ø 48.3 x 3.2, l = 6.0 m**	6000

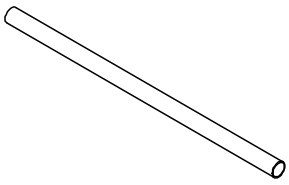

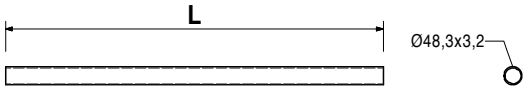

017020	1.120	**Standard Coupler NK 48/48, galv.** For Scaffold Tubes Ø 48 mm.

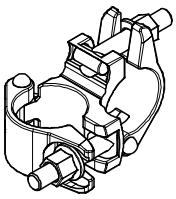

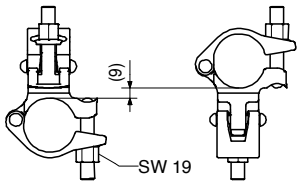

Item no.	Weight kg	
017010	1.400	**Swivel Coupling DK 48/48, galv.** For Scaffold Tubes Ø 48 mm.

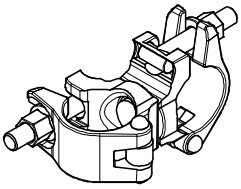

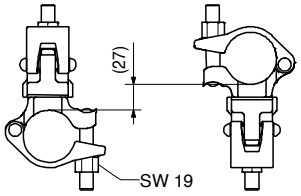

024590	32.000	**Wedge Lowering Device 420 kN, painted** For releasing and lowering large loads.

Note
Take Type Test into consideration.
Wrench size SW 46.
Technical Data
Separate Design Information on request.

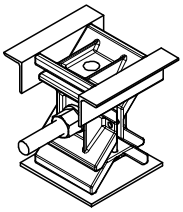

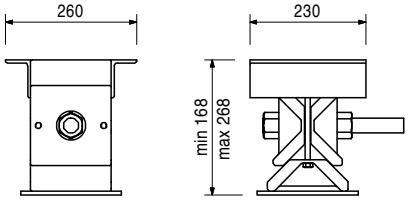

117930	53.300	**Wedge Lowering Device 1000 kN, painted** For releasing and lowering large loads.

Note
Take Type Test into consideration.
Wrench size SW 80.
Technical Data
Separate Design Information on request.

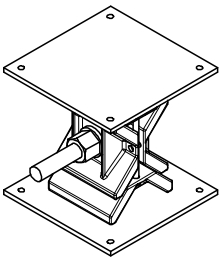

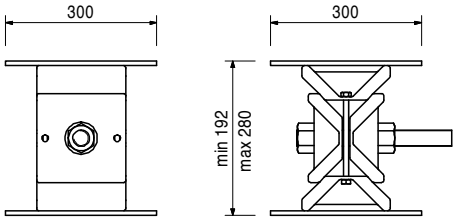

Item no.	Weight kg
065066	15.100

End Guardrail Frame 55
Clampable end guardrail for all PERI scaffold platforms and climbing systems.

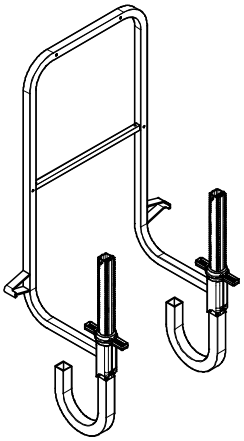

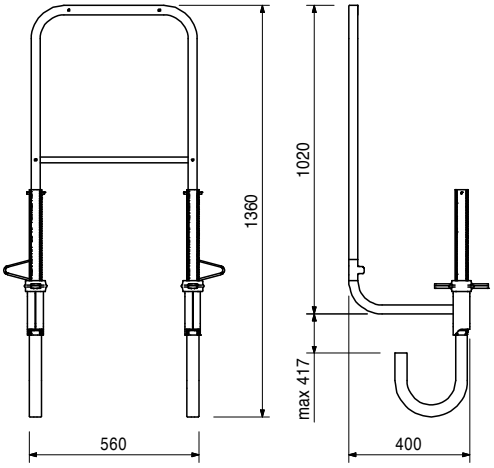

PERI International

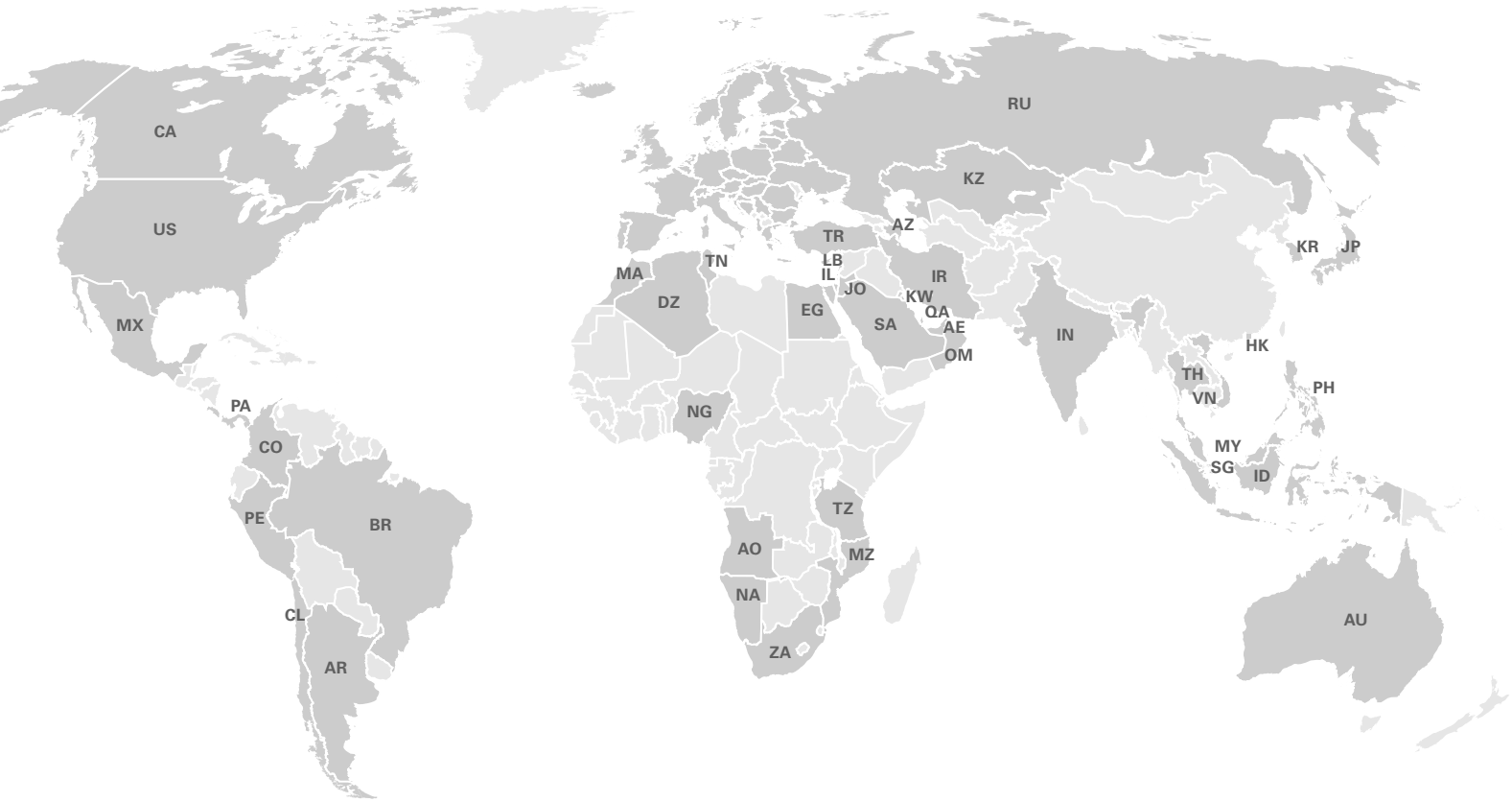

North America

CA Canada
PERI Formwork Systems, Inc.
www.peri.ca

MX Mexico
PERI Cimbras y Andamios, S.A. de C.V.
www.peri.com.mx

PA Panama
PERI Panama Inc.
www.peri.com.pa

US USA
PERI Formwork Systems, Inc.
www.peri-usa.com

South America

AR Argentina
PERI S.A.
www.peri.com.ar

BR Brazil
PERI Formas e Escoramentos Ltda.
www.peribrasil.com.br

CL Chile
PERI Chile Ltda.
www.peri.cl

CO Colombia
PERI S.A.S.
www.peri.com.co

PE Peru
PERI Peruana S.A.C.
www.peri.com.pe

Africa

AO Angola
Pericofragens, Lda.
www.peri.pt

DZ Algeria
S.A.R.L. PERI
www.peri.dz

EG Egypt
Egypt Branch Office
www.peri.com.eg

MA Morocco
PERI S.A.
www.peri.ma

MZ Mozambique
PERI (Pty.) Ltd.
www.peri.co.mz

NA Namibia
PERI (Pty.) Ltd.
www.peri.na

NG Nigeria
PERI Nigeria Ltd.
www.peri.ng

TN Tunisia
PERI S.A.U.
www.peri.es

TZ Tanzania
PERI Formwork and Scaffolding Ltd
www.peri.co.tz

ZA South Africa
PERI Formwork Scaffolding (Pty) Ltd
www.peri.co.za

Asia

AE United Arab Emirates
PERI (L.L.C.)
www.peri.ae

AZ Azerbaijan
PERI Repesentative Office
www.peri.com.tr

HK Hong Kong
PERI (Hong Kong) Limited
www.perihk.com

ID Indonesia
PT Beton Perkasa Wijaksana
www.betonperkasa.com

IL Israel
PERI F.E. Ltd.
www.peri.co.il

IN India
PERI (India) Pvt Ltd
www.peri.in

IR Iran
PERI Pars. Ltd.
www.peri.ir

JO Jordan
PERI GmbH – Jordan
www.peri.com

JP Japan
PERI Japan K.K.
www.peri.co.jp

KR Korea
PERI (Korea) Ltd.
www.perikorea.com

KW Kuwait
PERI Kuwait W.L.L.
www.peri.com.kw

KZ Kazakhstan
TOO PERI Kazakhstan
www.peri.kz

LB Lebanon
PERI Lebanon Sarl
lebanon@peri.de

MY Malaysia
PERI Formwork Malaysia Sdn. Bhd.
www.perimalaysia.com

OM Oman
PERI (L.L.C.)
www.peri.ae

PH Philippines
PERI-Asia Philippines, INC.
www.peri.com.ph

QA Qatar
PERI Qatar LLC
www.peri.qa

SA Saudi Arabia
PERI Saudi Arabia Ltd.
www.peri.com.sa

SG Singapore
PERI Asia Pte Ltd
www.periasia.com

TH Thailand
Peri (Thailand) Co., Ltd.
www.peri.co.th

TR Turkey
PERI Kalıp ve İskeleleri
www.peri.com.tr

VN Vietnam
PERI ASIA PTE LTD
www.peri.com.vn

PERI GmbH
Formwork Scaffolding Engineering
Rudolf-Diesel-Strasse 19
89264 Weissenhorn
Germany
Tel. +49 (0)7309.950-0
Fax +49 (0)7309.951-0
info@peri.com
www.peri.com

Oceania

AU Australia
PERI Australia Pty. Ltd.
www.periaus.com.au

Europe

AL Albania
PERI Kalıp ve İskeleleri
www.peri.com.tr

AT Austria
PERI Ges.mbH
www.peri.at

BA Bosnia and Herzegovina
PERI oplate i skele d.o.o
www.peri.com.hr

BE Belgium
PERI N.V.
www.peri.be

BG Bulgaria
PERI Bulgaria EOOD
www.peri.bg

BY Belorussia
IOOO PERI
www.peri.by

CH Switzerland
PERI AG
www.peri.ch

CZ Czech Republic
PERI spol. s r.o.
www.peri.cz

DE Germany
PERI GmbH
www.peri.de

DK Denmark
PERI Danmark A/S
www.peri.dk

EE Estonia
PERI AS
www.peri.ee

ES Spain
PERI S.A.U.
www.peri.es

FI Finland
PERI Suomi Ltd. Oy
www.perisuomi.fi

FR France
PERI S.A.S.
www.peri.fr

GB United Kingdom
PERI Ltd.
www.peri.ltd.uk

GR Greece
PERI Hellas Ltd.
www.perihellas.gr

HR Croatia
PERI oplate i skele d.o.o.
www.peri.com.hr

HU Hungary
PERI Kft.
www.peri.hu

IR Ireland
Siteserv Access & Formwork
www.siteservaccess.ie

IS Iceland
Armar ehf.
www.armar.is

IT Italy
PERI S.r.l.
www.peri.it

LT Lithuania
PERI UAB
www.peri.lt

LU Luxembourg
N.V. PERI S.A.
www.peri.lu

LV Latvia
PERI SIA
www.peri-latvija.lv

NL Netherlands
PERI b.v.
www.peri.nl

NO Norway
PERI Norge AS
www.peri.no

PL Poland
PERI Polska Sp. z o.o.
www.peri.com.pl

PT Portugal
Pericofragens Lda.
www.peri.pt

RO Romania
PERI România SRL
www.peri.ro

RS Serbia
PERI oplate d.o.o.
www.peri.rs

RU Russia
OOO PERI
www.peri.ru

SE Sweden
PERI Sverige AB
www.peri.se

SI Slovania
PERI oplate i skele d.o.o
www.peri.com.hr

SK Slovakia
PERI spol. s. r.o.
www.peri.sk

UA Ukraine
TOW PERI
www.peri.ua

The optimal System for every Project and every Requirement

Wall Formwork

Column Formwork

Slab Formwork

Climbing Systems

Bridge Formwork

Tunnel Formwork

Shoring Systems

Construction Scaffold

Facade Scaffold

Industrial Scaffold

Access

Protection Scaffold

Safety Systems

System-Independent Accessories

Services

PERI GmbH
Formwork Scaffolding Engineering
Rudolf-Diesel-Strasse 19
89264 Weissenhorn
Germany
Tel. +49 (0)7309.950-0
Fax +49 (0)7309.951-0
info@peri.com
www.peri.com

DE en 01 | 2018 1sm 791779 © PERI GmbH